Development of a Measure of Cognitions and Beliefs in Trichotillomania

Imogen Claire Rehm

School of Psychology, Faculty of Health, Arts and Design

Swinburne University of Technology

Submitted in partial fulfilment of the Doctor of Philosophy (Clinical Psychology)

June, 2016

Abstract

Trichotillomania (TTM) is characterised by the repetitive removal of one's hair, causing hair loss (American Psychiatric Association [APA], 2013). Behavioural models and phenomenological accounts comparing TTM with putatively related compulsive-impulsive spectrum disorders have been highly influential in steering research regarding its phenomenology and treatment (e.g., Azrin & Nunn, 1973; Hollander & Wong, 1995; Mansueto, Stemberger, Thomas, & Golomb, 1997). Despite a cognitive model of TTM being proposed two decades ago (Gluhoski, 1995), there has been limited research on the role of maladaptive cognitions and beliefs in the development and maintenance of TTM (cf. Norberg, Wetterneck, Woods, & Conelea, 2007). The development and testing of standard and third-wave cognitive behavioural therapies for TTM have nevertheless proliferated despite the absence of research identifying maladaptive beliefs known to elicit and maintain TTM symptoms.

This thesis aimed to investigate the nature of dysfunctional cognitions and beliefs associated with TTM via the development and validation of a psychometric measure of TTM-relevant beliefs. Given the paucity of research conducted in this area, it was first necessary to perform an in-depth, qualitative exploration of the dysfunctional cognitions, identified by individuals with TTM, as playing a role in the onset and maintenance of their hairpulling episodes (Study 1). Participants in this study comprised eight women (M_{age} = 29.88, SD = 5.05) whose symptoms met *DSM-IV-TR* criteria for TTM (APA, 2000). Interview data were analysed using the qualitative methodology of interpretative phenomenological analysis (Smith, 1996). Six themes of beliefs were identified; negative self-beliefs, control beliefs, coping beliefs, beliefs about negative emotion, permission-giving cognitions, and perfectionistic standards (for hair quality).

The second study aimed to develop and validate the Beliefs in TTM Scale (BiTS). A pool of 50 items based upon themes identified in the first study was generated and administered online to a large sample (N = 841) of participants with and without self-reported problematic, non-cosmetic hairpulling behaviours. In a random split of the sample (n = 421), exploratory factor analysis of the BiTS items in a pooled sample of participants with and without non-cosmetic hairpulling behaviours supported retention of 13 items comprising three factors; negative self-beliefs, perfectionism/control, and emotional avoidance. In the second half (n = 420) of a pooled sample of participants with and without non-cosmetic hairpulling behaviours, the third study supported the three-factor measurement model using confirmatory factor analysis. The measurement invariance (i.e., equivalence) of the BiTS was also supported for use in participants separated by their endorsement of hairpulling behaviours. Both studies suggested that the BiTS had satisfactory psychometric properties. All three factors were: significantly correlated with greater hairpulling severity and higher levels of focused hairpulling; significantly differentiated between participants with and without non-cosmetic hairpulling; and negative self-beliefs were found to predict hairpulling severity over and above depression and anxiety symptoms.

The fourth study examined the psychometric properties of the BiTS and the relationships between TTM-relevant cognitions and symptoms, in a sample of 20 participants with clinically significant TTM symptoms as compared to scores in an age- and gender-matched sample of 48 participants recruited from a student and community population. The BiTS was again found to have good internal consistency and construct validity. Replicating the previous findings, negative self-beliefs, perfectionism/control and emotional avoidance were all correlated with hairpulling severity and focused hairpulling. Negative self-beliefs and perfectionism/control significantly differentiated

between TTM and control participants after controlling for depression symptoms, while emotional avoidance did not. Negative self-beliefs were again found to significantly predict TTM symptoms over and above depression symptoms.

Overall, the findings offered preliminary support for the psychometric properties of the BiTS, and for the role of dysfunctional cognitions and beliefs in TTM. The findings challenge behaviourally-focused models of TTM to more comprehensively acknowledge dysfunctional cognitions – particularly, negative self-beliefs – as contributing to the maintenance of the disorder. Theoretical and treatment implications are discussed, and avenues for future research are proposed.

Declaration

This is to certify that:

1. This thesis contains no material which has been accepted for the award of any other degree or diploma at any university or equivalent institution.

2. To the best of my knowledge, this thesis contains no material previously published or written by another person except where due reference is made in the text of this thesis.

3. Where the work is based on joint research or publications, the relative contributions of the respective authors is acknowledged. Please note that Chapter 6 of this thesis is comprised of an adapted version of a paper published in a peer reviewed journal:

> Rehm, I. C., Nedeljkovic, M., Thomas, A., & Moulding, R. (2015). The role of cognitions and beliefs in trichotillomania: A qualitative study using interpretative phenomenological analysis. *Behaviour Change, 32*(4), 209-230. doi:10.1017/bec.2015.11

The ideas, development, and writing of this paper was the principal responsibility of me, the candidate, working under the supervision of Dr Maja Nedeljkovic, Dr Anna Thomas, and Dr Richard Moulding. For specific information on relative contributions of all authors please refer to the author indication form (Appendix A).

4. I warrant that I have obtained permission from the copyright owners to use any of my own published work in which the copyright is held by another party (see Appendix B).

5. This thesis is less than 100,000 words in length, exclusive of tables, bibliographies, and appendices.

_____

Imogen Claire Rehm

2016

Acknowledgements

First and foremost, I would like to express my deepest thanks to my supervisors, Dr Maja Nedeljkovic and Dr Richard Moulding, for taking the risk back in 2011 to delve into what was (and still is) some of the first research on trichotillomania (TTM) to be conducted in Australia. Your optimism and belief in this research – and its potential to act as a catalyst for improving sorely-needed awareness of, and resources for, TTM in this country – has been tremendous. Maja, thank you so much for your assistance with the research design and for providing your clinical knowledge, gentle reassurance, and for the many opportunities you have offered in support of my professional and academic development. I could not have achieved so much in the past five years without your confidence in me. Richard, your attention to detail and expertise in statistical methods has been invaluable. I have learned so much from your writing style and from your ideas regarding all things "obsessive-compulsive".

My sincere appreciation also goes to Dr Anna Thomas for providing her expertise and essential guidance in qualitative research methods. Warm thanks also go to Associate Professor Denny Meyer for so generously providing her expertise in, and support with, structural equation modelling techniques. There have been many other faculty members at Swinburne who have been incredibly influential to my professional development, but I'd especially like to thank Dr Jo Abbott and Associate Professor Sunil Bhar; both of whom have expanded my clinical and research interests, skills, capabilities, and confidence through their generous and nurturing mentorship.

I am also grateful to Tanya Arabatzoudis for her support with the recruitment and assessment of non-clinical control participants in the final study.

To my fellow psychologists-in-training, but especially to Sarah, Tash, Faye, and Anthony – thank you for the “peer supervision”, the thesis brainstorming sessions, the dinners and drinks, the coffee breaks, the job leads, the commiserations and celebrations (both thesis- and life-related), and everything else in between!

My husband, Jon, is also deserving of thanks and appreciation for his enduring patience, love, encouragement, and optimisim; as are my Mum and Dad, for their love, support, and constant belief in me; and my dearest friends, Megan and Casey, for keeping me connected to a life beyond reading, writing, and statistics.

Last but not least, thank you to the staff and volunteers of the Anxiety Recovery Centre of Victoria for supporting the recruitment of participants to this research, and for offering hope and support to Australians affected by TTM. Indeed, my heartfelt thanks go to the hundreds of participants who took part in my studies; but particularly to those with TTM, who took a risk, put their trust in me, and so bravely discussed their experiences with me. Their courage is admirable and is truly what made this thesis possible.

Table of Contents

List of Tables

List of Figures

List of Appendices

List of Relevant Publications During Candidature

Moulding, R., Mancuso, S. G., Rehm, I., & Nedeljkovic, M. (2016). The self in the obsessive compulsive-related disorders: Hoarding disorder, body dysmorphic disorder and trichotillomania. In M. Kyrios, R. Moulding, G. Doron, S. S. Bhar, M. Nedeljkovic, & M. Mikulincer (Eds.), *The self in understanding and treating psychological disorders.* Cambridge University Press.

Rehm, I., Moulding, R., & Nedeljkovic, M. (2015). Psychological treatment of trichotillomania: Update and future directions. *Australasian Psychiatry, 23(4*), 365-368. doi:10.1177/1039856215590029

Rehm, I. C., Nedeljkovic, M., Thomas, A., & Moulding, R. (2015). The role of cognitions and beliefs in trichotillomania: A qualitative study using interpretative phenomenological analysis. *Behaviour Change*, *32*(4), 209-230. doi:10.1017/bec.2015.11

List of Relevant Conference Presentations During Candidature

Poster Presentations

Rehm, I. C., Nedeljkovic, M., & Moulding, R. (April, 2015). *Introducing a new measure in the assessment of trichotillomania: The beliefs in trichotillomania scale (BiTS)*. Presented at the 22nd Trichotillomania Learning Centre Conference, Arlington, USA.

Oral Presentations

Rehm, I. C., Nedeljkovic, M., Moulding, R., & Thomas, A. (November, 2014). *Cognitions and beliefs in trichotillomania*. Presented at the International Anxiety Disorders Society conference, Melbourne, Australia.

Symposia

Rehm, I. C., Nedeljkovic, M., Moulding, R., & Thomas, A. (July, 2014). The qualitative development of a measure of cognitions and beliefs in trichotillomania. In M. Nedeljkovic (Chair), *Advances in understanding and treating obsessive compulsive disorders.* Symposium conducted at the 28th International Conference of Applied Psychology, Paris, France.

Rehm, I. C., Nedeljkovic, M., Thomas, A., & Moulding, R. (July, 2013). The role of self-beliefs in episodes of chronic hairpulling. In M. Nedeljkovic (Chair), *Self beliefs in obsessive- compulsive spectrum disorders: Their role in etiology, maintenance and treatment*. Symposium conducted at the 7th World Congress of Behavioural and Cognitive Therapies, Lima, Peru.

Rehm, I. C., Nedeljkovic, M., & Moulding, R. (September, 2012*)*. A qualitative investigation of the cognitions experienced in episodes of chronic hairpulling: Informing cognitive-behavioural models of trichotillomania. In M. Nedeljkovic (Chair), *Extending current understanding of obsessive-compulsive spectrum disorders*. Symposium conducted at the 47th Australian Psychological Society Conference, Perth, Australia.

PART I – GENERAL BACKGROUND AND INTRODUCTION

"All human actions have one or more of these seven causes: chance, nature, compulsions, habit, reason, passion, desire."

Aristotle (384 – 322 BC)

"We all have times when we go home at night and pull out our hair and feel misunderstood and lonely and like we're failing."

Jude Law

1. CHAPTER 1 – Introduction and Overview of this Thesis

1.1 Introduction

Trichotillomania (TTM) involves the repeated removal of one's hair causing hair loss (American Psychiatric Association [APA], 2013). Hair is typically removed from the scalp, eyelashes, and eyebrows, but can be removed from anywhere on the body. Hair removal is not for cosmetic or normal grooming purposes; rather, hairpulling is experienced as uncontrollable and the resultant hair loss is unintentional (APA, 2013; Casati, Toner, & Yu, 2000). TTM is associated with high levels of psychiatric comorbidity, disability, shame, and secrecy (Duke, Keeley, Geffken, & Storch, 2010). It is also much more prevalent than previously believed, with lifetime prevalence estimates as high as 4% (Odlaug & Grant, 2010). The need to understand TTM and develop effective treatments is clear, yet it receives substantially less research than do disorders with comparable prevalence rates such as bipolar disorder and schizophrenia (Woods & Miltenberger, 2006). As a result, TTM remains a poorly understood disorder, which is reflected in the incomplete and under-evaluated models that have been proposed to account for its development and for its chronic, relapsing trajectory.

1.2 Background and Research Rationale

Initially classified as an impulse control disorder (APA, 1987, 1994, 2000), phenomenological accounts (e.g., Hollander & Wong, 1995) have compared TTM with disorders that are characterised by varying degrees of compulsivity and impulsivity; most commonly, with obsessive-compulsive disorder (OCD). This approach has facilitated significant advances in identifying the psychobiological underpinnings of TTM, and has underscored its complexity as a disorder that features neuropsychological and neurological mechanisms underlying both compulsivity and impulsivity (Flessner,

Knopik, & McGeary, 2012; Odlaug, Chamberlain, Schreiber, & Grant, 2013). As neither a strictly compulsive nor impulsive disorder, its recent reclassification as an obsessive-compulsive related disorder (OCRD; APA, 2013) has been a matter of ongoing scrutiny and examination (Grant & Stein, 2014; Starcevic, 2015). One of the arguments against its conceptualisation as an OCRD is that, compared to OCD and body dysmporphic disorder (BDD), the cognitive aspects of TTM phenomenology are minimal; for instance, TTM has been described as a "motorically focused ('lower order')" OCRD (Phillips et al., 2010, p. 543).

However, the role of cognitions and beliefs in TTM has not been the subject of systematic research. Two decades ago, a cognitive model of TTM based upon cognitions and beliefs relevant to substance abuse was proposed (Gluhoski, 1995), but has inspired very little investigation on the topic. The extent of our knowledge of the role of cognitive processes in TTM can be summarised as an acknowledgment that automatic cognitions relating to a preference to remove hairs of certain visual and/or tactile qualities act as hairpulling cues (Duke, Bodzin, Tavares, Geffken, & Storch, 2009; Duke, Keeley, Ricketts, Geffken, & Storch, 2010; Mansueto, Stemberger, Thomas, & Golomb, 1997), and consequential to hairpulling, that there are thoughts relating to shame and low self-esteem, which likely exacerbates the negative affect that elicits further hairpulling (Franklin & Tolin, 2007; Weingarden & Renshaw, 2014). Indeed, there is increasing evidence to suggest that emotion dysregulation is an important vulnerability and maintaining factor in TTM (Roberts, O'Connor, & Bélanger, 2013).

Cognitive behavioural therapies (CBT) such as acceptance and commitment therapy and dialectical behaviour therapy directly target emotion dysregulation and related processes. When augmented with behavioural therapy (BT), these treatments

have shown efficacy for reducing TTM severity (e.g., Keuthen et al., 2012; Woods, Wetterneck, & Flessner, 2006). Despite this, relapse rates following various forms of BT/CBT remain unacceptably high, with 50 – 67% of initial treatment responders relapsing in the several months following treatment (Falkenstein, Rogers, Malloy, & Haaga, 2014). One possible explanation for this situation is that the CBT approaches currently applied to TTM fail to address important, but as-yet unidentified dysfunctional cognitions and beliefs that contribute to TTM symptoms (Rehm, Moulding, & Nedeljkovic, 2015; Roberts et al., 2013; Slikboer, Nedeljkovic, Bowe, & Moulding, 2015). The conceptual models that currently exist to explain TTM, which ultimately guide and inform its treatment, remain uninformed on this potentially important factor.

Given the reclassification of TTM as an OCRD; the increasing support for affective factors and emotion dyregulation in its maintenance and treatment; and the proliferation of cognitive behavioural treatments applied to TTM in recent years – but without the guiding framework of an integrated, comprehensive, and evidence-based cognitive behavioural model – an investigation of the role of maladaptive cognitions and beliefs in TTM is timely.

1.3 Aims and Methodology

The overarching proposition of this thesis is that dysfunctional cognitions and beliefs are associated with TTM. There were two aims of this thesis. The first aim was to investigate the presence and content of dysfunctional cognitions and beliefs in TTM to determine if these factors were at all relevant to the onset and maintenance of TTM symptoms. Given the paucity of research conducted on this aspect of TTM phenomenology, qualitative interviews were first conducted in a small, homogenous sample of adults with TTM.

The second aim was to develop a psychometric measure of TTM-relevant cognitions and beliefs, such that their relationship with TTM symptoms could be examined quantitatively; ultimately, the development of such a measure would enable further examination of the first aim. This measure – the Beliefs in TTM Scale (BiTS) – was developed on the basis of dysfunctional cognitions and beliefs identified within the initial qualitative analysis. Exploratory factor analysis was first performed to evaluate the factor structure of the original 50-item pool such that a smaller 13-item measure could be achieved. Confirmatory factor analysis was then performed to support the reliability of the 13-item factor structure. Both factor analyses were performed in a large, pooled sample of participants who either did or did not endorse problematic non-cosmetic hairpulling behaviours.

Finally, validation of the BiTS was performed in a sample of participants with TTM compared to a community and student sourced control group. Various analyses were performed to determine if the BiTS could differentiate between the two groups and to examine the relationship between TTM-relevant beliefs, hairpulling severity, and hairpulling styles.

1.4 Thesis Overview

This thesis is comprised of three parts. Part I (Chapters 2 – 5) provides a comprehensive overview of what is known about TTM and its treatment to date. Chapter 2 reviews the diagnostic conceptualisation, phenomenology, epidemiology, course, and impact of TTM as and its associated psychiatric comorbidities.

Chapter 3 provides a critical analysis of the various conceptual models and explanations that have been proposed to account for the onset and maintenance of TTM. In doing so, the absence of an evidence-based cognitive model of TTM is highlighted

and thus, the need for an empirically grounded, comprehensive, and integrated cognitive behavioural model of TTM is argued. This point is further established in Chapter 4, which reviews the conceptual foundations and effectiveness of the various CBT approaches that have been developed and trialled for TTM. Methodological and theoretical limitations hampering conclusions about the efficacy of these treatments are also discussed.

Chapter 5 briefly integrates the research of the preceding chapters to justify the need for this thesis. It is argued that investigating dysfunctional cognitions and beliefs in TTM, and developing an associated measure, will have wide-ranging implications including, but not limited to, the development of a true cognitive behavioural model of TTM that can guide the development and evaluation of more effective therapies.

Part II presents four empirical studies that were conducted for this thesis. Chapter 6 (Study 1) features the qualitative investigation of cognitions and beliefs in a small, homogenous sample of women with TTM. The six themes of influential beliefs identified within this analysis supported the need to investigate dysfunctional cognitive processes in TTM and informed the development of a measure, as was the focus of the following three studies.

Chapter 7 features the development and psychometric validation of the Beliefs in Trichotillomania Scale (BiTS) over two separate studies that used a random-split of a large sample of participants, including those who did and did not endorse non-cosmetic hairpulling behaviours. Study 2 comprised an exploratory factor analysis of the original 50-item pool to determine the factor structure of the BiTS, and to justify the retention of a reliable subset of 13 items using the first half of the sample. Study 3 comprised a

confirmatory factor analysis of the final 13-item BiTS to confirm its factor structure, and replicate its reliability and construct validity using the second half of the sample.

Chapter 8 (Study 4) examines the psychometric properties of the BiTS in a sample of adults with clinically significant TTM symptoms compared to an age- and gender-matched control group. Controlling for depression and anxiety symptoms, the ability of the BiTS to differentiate TTM participants from control participants was investigated. Finally, the relationship between the BiTS subscale scores with TTM symptomatology was examined.

Section III (Chapter 9) concludes this thesis. The major findings of the four studies are summarised and discussed with reference to implications for advancing cognitive behavioural models and treatments of TTM. Methodological limitations of the studies are discussed and avenues for future research are proposed.

1.5 Summary

This chapter provided an introduction to the literature that has influenced the rationale and justification for this thesis. The phenomenology, diagnostic conceptualisation, aetiological models, and psychological treatments of TTM were briefly discussed as part of this, and served to highlight the currently limited knowledge of the role of maladaptive cognitions and beliefs in TTM. The aims and research methodology of this thesis were presented; namely, that via the development and validation of a new scale, dysfunctional cognitions and beliefs will be shown to be associated with TTM. Finally, the content of each chapter was summarised, as will be elaborated upon in the chapters that follow.

2. CHAPTER 2 –Phenomenology and Epidemiology of Trichotillomania

2.1 Introduction

The first medical account of TTM was published in 1889 by French physician, Francois Henri Hallopeau, who detailed his contact with a male patient who repeatedly pulled out his scalp hair to the point of causing visible hair loss (Hallopeau, 1889, cited by Penzel, 2003). Hallopeau used the combination of three Greek words to name the disorder as it is currently known; “trich” meaning hair, “tillo” meaning to pluck, tear or pull, and “mania”, which can be interpreted to mean madness, excessive activity or craving (Penzel, 2003). Despite this, TTM was not officially recognised as a mental disorder in Western psychiatry until almost 100 years later (APA, 1987). In the several decades preceding its diagnostic listing, TTM was considered a very rare condition resembling a symptom of OCD (e.g., Greenberg & Sarner, 1965) or a habit akin to onychopagia (nail-biting; Azrin & Nunn,1973). It has since been conceptualised as an impulse control disorder (APA, 1987, 1994, 2000) and, most recently, as an obsessive-compulsive related disorder (APA, 2013). Neither classification has been satisfactory (e.g., Phillips et al., 2010).

Comprehensively characterising the phenomenology, prevalence, impact, and diagnostic classification of TTM continues to be a challenge. However, interest and research into TTM has rapidly expanded over the past twenty years and this has supported a more nuanced understanding of its complexities. In many areas, this research has raised more questions than answers about the nature of TTM phenomenology, particularly in terms of whether discrete hairpulling styles or disorder subtypes exist. This chapter will review the diagnostic classification, phenomenology

and epidemiology of TTM, including the significant disability it causes for those affected and its high rates of comorbidity with other psychological disorders.

2.2 Diagnostic Classification

2.2.1 DSM-III, DSM-IV, and ICD-10. TTM was first recognised as a mental disorder in the *Diagnostic and Statistical Manual of Mental Disorders* in 1987 (*DSM-III-R*; APA, 1987). Several years later, it was recognised in the *International Classification of Diseases* (*ICD-10*; World Health Organisation [WHO], 1992). The classification of TTM in each nosology has been contentious, reflecting limitations to the psychiatric discipline's understanding of its pathogenesis and core phenomenological characteristics (Phillips et al., 2010). *ICD-10* currently classifies TTM as a Habit and Impulse Control Disorder, while the *DSM-III-R* and *DSM-IV* similarly classified TTM as an Impulse Control Disorder Not Elsewhere Classified (APA, 1987, 2000). In the *ICD-10*, *DSM-III-R* and *DSM-IV*, TTM was grouped with intermittent explosive disorder, kleptomania, pathological gambling, and pyromania. This grouping was described as a "residual" diagnostic category for disorders that featured poor impulse control, yet could not be classified as psychoactive substance use disorders or paraphilias (APA, 1987, p. 321). Nevertheless, this residual grouping was believed to share the following core features: (1) failure to resist an impulse, drive or temptation to perform some act that is harmful to oneself or others; (2) an increasing sense of tension or arousal before committing the behaviour or act; and (3) an experience of either pleasure, gratification or relief when performing the behaviour or act (APA, 1987, 1994, 2000).

As such, early *DSM* diagnostic criteria for TTM were modelled from these purported core features of impulse control disorders (APA, 1987, 2000). *DSM-IV*

diagnosis of TTM required that the individual repeatedly pulled out their hair, resulting in noticeable hair loss (criterion A); experienced an increasing sense of tension immediately preceding hairpulling or when attempting to resist the behaviour (criterion B); experienced pleasure, gratification or relief when hairpulling (criterion C); the condition could not be better explained by another mental disorder (e.g., hairpulling in response to delusions or hallucinations in schizophrenia) or medical condition (e.g., a dermatological condition such as alopecia areata) (criterion D); and the condition caused significant distress or functional impairment (APA, 2000). However, research repeatedly demonstrated that the phenomenology of TTM was not accurately characterised by these features. The most commonly criticised diagnostic criteria were B and C. Referring to *DSM-III-R* criteria, Christenson, Mackenzie, and Mitchell (1991) reported that, of 60 individuals who engaged in chronic hairpulling, 17% (n = 10) either did not endorse increasing tension (criteria B) and/or a sense of gratification or relief when pulling (criterion C). More recently, du Toit, van Kradenburg, Niehaus, and Stein (2001) reported that 19% (n = 9) of individuals with chronic hairpulling did not endorse symptoms specified by *DSM-IV* criteria B or C. These findings prompted concerns that the diagnostic criteria for TTM were too strict and could potentially prevent individuals who experienced distressing, clinically significant hairpulling from receiving appropriate diagnosis and treatment (Christenson, Mackenzie, et al., 1991).

The validity and utility of criteria B and C has been most widely explored in the Trichotillomania Impact Project for Adults, in which 2,268 individuals self-referred for non-cosmetic hairpulling completed internet-based self-report surveys (Woods, Flessner, et al., 2006). Of 1,711 participants who reported having self-inflicted noticeable hair loss and also having experienced distress and impairment as a result, 4% (n = 67) did not endorse either *DSM-IV* criteria B or C (Stein et al., 2010). Only 38% (n

= 639) reported tension or urges prior to hairpulling or upon resisting these urges "all" (i.e., 90 – 100%) of the time (Woods, Flessner, et al., 2006). The majority of participants (43%, *n* = 722) believed they experienced such tension "most" (i.e., 71 – 89%) of the time. Similarly, only 40% (*n* = 668) of the sample reported feeling relief or gratification after an episode of hairpulling all of the time (Woods, Flessner, et al., 2006). Although the results of this study are limited in that they are based solely upon self-report of non-referred individuals, it does suggest that a significant proportion of individuals with clinically significant hairpulling that causes distress and/or functional impairment do not always experience an increase and/or decrease of tension prior to, and upon, hairpulling. Further to this, in a study that did clinically interview participants with TTM symptoms (*n* = 93), whether criteria B and C was satisfied or not had no differential relationship with symptom severity, functional impairment, or comorbid affective symptoms and related body-focused repetitive behaviours (Lochner et al., 2011). These findings further invalidate the relevance of criteria B and C, and importantly, suggest that TTM is not *solely* characterised by disordered impulse control as defined by *DSM-III/DSM-IV*.

2.2.2 DSM-5. Based upon the inadequate empirical support for *DSM-IV* diagnostic criteria B and C, and the implications this raised for its classification as an impulsive control disorder, *DSM-5* (APA, 2013) was challenged to develop criteria that more accurately reflected the core phenomenological characteristics of TTM and clarify its place within the nosology. Along with the distress/functional impairment, medical exclusion, and psychiatric disorder hierarchy (i.e., criteria C, D, and E), *DSM-5* still requires that the hairpulling is recurrent and results in hair loss (criterion A). However, hair loss no longer needs to be noticeable as it is often well concealed or distributed widely across the targeted pulling area/s (Stein et al., 2010). *DSM-5* criteria no longer

specifies a sense of tension prior to or when resisting hairpulling nor the experience of pleasure, gratification or relief during hairpulling. To replace these criteria, several new criteria designed to capture the "driven" nature of hairpulling episodes were trialled across four sites by clinicians with expertise in TTM (Lochner et al., 2012, p. 1026). This study's findings influenced the selection of the current *DSM-5* criterion B; "repeated attempts to decrease or stop hairpulling behavior" (APA, 2013, p. 251). This criterion was endorsed by 99% (n = 69) of participants with clinically significant hairpulling (Lochner et al., 2012). However, clinicians rated it the most useful criterion for diagnosing TTM in only 16% (n = 13) of cases, whereas an alternative criterion B, which referenced a "recurrent urge to pull", was rated most useful in 39% (n = 33) of cases (Lochner et al., 2012, p.1028). These results suggest that there is still scope for identifying and operationalising the core characteristics of TTM, beyond the criteria of recurrent hairpulling resulting in hair loss and that causes significant distress or functional impairment. For instance, Grant and Stein (2014, p. 63) have recommended that the upcoming *ICD-11* considers incorporating diagnostic criteria reflective of individuals' descriptions that the urge to pull hair is "so strong that they feel it is futile to try to stop it."

Finally, *DSM-5* has now re-classified TTM as an Obsessive-Compulsive Related Disorder (OCRD), alongside OCD, BDD, hoarding disorder, and skin-picking disorder (SPD). There have long been proponents for an obsessive-compulsive spectrum of disorders (e.g., Hollander, 1993) and TTM has typically been considered for inclusion in this grouping as it features repetitive, ritualistic behaviours similar to overt compulsions in OCD (Hollander, 1993; Phillips et al., 2010). However, the presence of phenomenological similarities is an insufficient basis for classifying disorders within a diagnostic category that assumes all disorders within it are related by way of

pathogenesis (Castle & Phillips, 2006). Several systematic reviews were therefore completed to evaluate the similarities and differences among TTM and: OCD; Tourette's Syndrome (TS) and tic disorders; stereotypic movement disorder; body-focused repetitive behaviours (BFRBs; e.g., skin-picking); and the *DSM-IV* impulse control disorders in terms of their comorbidity, familiality, psychobiological risk factors, and treatment response, among other key validators suggested for *DSM-5* (for reviews, see Ferrão, Miguel, & Stein, 2009; Starcevic & Janca, 2011; Stein et al., 2010). It was ultimately concluded that although TTM shared little with impulse control disorders, its overlap with OCD was "partial at best" (Phillips et al., 2010, p.537). Rather, the consensus was that TTM should be categorised as a BFRB disorder alongside SPD (Ferrão et al., 2009; Phillips et al., 2010; Stein et al., 2010). However, given the lack of conceptual boundaries and validation of a BFRB category (e.g., overlap with TS and disorders; O'Connor, 2002), TTM was placed within the OCRD category on the basis of its potentially greater clinical utility (Ferrão et al., 2009). This justification has been questioned, however, as available evidence supports different treatment, assessment, and conceptual models for TTM than for the other OCRDs, with the exclusion of SPD (Ferrão et al., 2009; Phillips et al., 2010; Starcevic & Janca, 2011).

Despite limitations to the empirical and theoretical justification of classifying TTM as an OCRD in *DSM-5*, the debate this has generated may serve to increase research efforts that attempt to clarify its core phenomenological features, and to investigate its clinical correlates and aetiological mechanisms in comparison to the other OCRDs (see also Chapter 3). Ultimately, this will enhance understanding and treatment options for TTM and its putatively related disorders.

2.3 Phenomenology

2.3.1 Hairpulling characteristics. The defining feature of TTM is the repetitive removal of hair resulting in hair loss (APA, 2013; WHO, 1992). As evidenced by the ongoing challenges to defining its diagnostic criteria reviewed above, TTM is increasingly being recognised as a highly heterogeneous disorder. The bodily areas from which hair is extracted; the methods by which hair is extracted, manipulated and discarded; and the affect, level of awareness, and environmental cues associated with hairpulling are all highly variable across populations sampled and idiosyncratic to affected individuals (Mansueto et al., 1997). Even the definition and characterisation of TTM subtypes remains contested, as will be discussed in section 2.3.4.

Hair can be pulled from anywhere on the body, but 44 – 84% individuals pull from the scalp and particularly from the crown area (Christenson, Mackenzie, et al., 1991; Cohen et al., 1995; du Toit et al., 2001; Duke et al., 2009; Duke, Keeley, Ricketts, et al., 2010; Ghisi, Bottesi, Sica, Ouimet, & Sanavio, 2013; Lochner, Seedat, & Stein, 2010; Woods, Flessner, et al., 2006). One study reported that significantly more females pull from the scalp and eyelashes than do males (Lochner et al., 2010), but this finding has not been replicated. Between 8 – 56% and 17 – 52% of individuals pull from their eyebrows and eyelashes, respectively (Christenson, Mackenzie, et al., 1991; Cohen et al., 1995; Duke et al., 2009; Duke, Keeley, Ricketts, et al., 2010; du Toit et al., 2001; Ghisi et al., 2013; Lochner et al., 2010; Woods, Flessner, et al., 2006). Initially, pulling hair from the pubic region was believed to occur in only 2% of individuals (Christenson, Mackenzie, et al., 1991). More recently, use of anonymous internet-based surveys reveal that pubic regions may be targeted for non-cosmetic purposes by approximately 50% of individuals with TTM symptoms (Woods, Flessner, et al., 2006).

The majority of adults with TTM pull hair from at least two different bodily areas, with some people pulling from as many as nine sites (Christenson, Mackenzie, et al., 1991; du Toit et al., 2001; Lochner at al., 2010). Most individuals' primary hairpulling site/s includes the scalp, but 18% pull only from areas besides the scalp (du Toit et al., 2001). Individuals who pull hair from the scalp have been found to experience greater TTM severity and functional impairment, including more suicidal tendencies, than have individuals who pull from other areas (Lochner et al., 2010; Woods, Flessner, et al., 2006).

Time spent engaged in hairpulling can last from several minutes to several hours each day (Christenson, Mackenzie, & Mitchell, 1994; Stanley, Borden, Bell, & Wagner, 1994). Time spent hairpulling is typically described as episodic (e.g., Christenson, Mackenzie, et al., 1991), although what constitutes a hairpulling episode is difficult to define. For instance, individuals perform many behaviours associated with hairpulling that do not involve actual hair extraction (e.g., hair twirling, visual examination of hairs, etc.), but whether this constitutes part of a hairpulling episode has not been delineated. Nevertheless, individuals who primarily pull hair from the scalp report an average of 27 hairpulling episodes each week, while those who primarily pull their eyelashes report an average of 15 hairpulling episodes each week (Christenson, Mackenzie, et al., 1991). Up to 42.6% of individuals cannot identify a specific number of hairpulling episodes they engage in each day, estimating that they pull during the whole day (du Toit et al., 2001). College students with TTM symptoms have reported less hairs pulled per episode on average ($M = 7.60$, $SD = 11.19$) compared to TTM patients attending outpatient psychiatric clinics, the majority of whom (44 – 57%) report pulling between 11-30 hairs per episode (du Toit et al., 2001; Lochner et al., 2010). The majority of individuals (33 – 41%) with clinically significant hairpulling estimate spending less

than one hour each day pulling out hair (Duke et al., 2009; Duke, Keeley, Ricketts et al., 2010), however, this may not account for time spent performing associated behaviours and rituals.

Prior to extracting hairs, the majority (66 – 69%) of individuals will "play" with their hair (du Toit et al., 2001; Lochner et al., 2010). Most individuals pull out single hairs at a time, typically with the fingers although implements like tweezers can also be utilised (Christenson, Mackenzie, et al., 1991). Twisting hair until it falls out is less common (Duke et al., 2009; Duke, Keeley, Ricketts et al., 2010), as is rubbing off the hair with the fingertips (Christenson, Mackenzie, et al., 1991). A common goal of hair extraction is to remove the hair with its root still intact (Mansueto et al., 1997) with 31 – 52% of individuals reporting that they "must" pull out the root (Duke et al., 2009; Duke, Keeley, Ricketts et al., 2010). With the root still intact, most individuals (33 – 37%) go on to visually examine it (Duke et al., 2009; Duke, Keeley, Ricketts et al., 2010). Oral manipulation (e.g., biting, chewing) of the root or hair shaft is less common but still prevalent (Duke et al., 2009; Duke, Keeley, Ricketts et al., 2010); between 7 – 21% of individuals with TTM ingest the hair, a behaviour termed trichophagia (Duke et al., 2009; Grant & Odlaug, 2008). Those who ingest their hair have significantly more severe TTM and are more frequently male (Grant & Odlaug, 2008). The most common post-pulling behaviours are to "play" with the hair (49 – 61%; du Toit et al., 2001; Lochner et al., 2010), roll it between the fingers (28%; Duke et al., 2009), and/or "drop (float)" it to the floor (33%; Duke, Keeley, Ricketts et al., 2010). Up to 5.6% may "save" the hair (Duke et al., 2009).

Research and anecdotal evidence has consistently reported preferential extraction of hairs that are perceived to be coarse, thick, or curly; to be different in length or asymmetrical compared to other hairs; to be the "wrong" colour; or to not look

or feel “right” (Christenson, Mackenzie, et al., 1991; Duke et al., 2009; Duke, Keeley, Ricketts et al., 2010; du Toit et al., 2001; Lochner et al., 2010; Mansueto et al., 1997). Few individuals (0 – 8%) report a preference for pulling out straight hairs (Duke et al., 2009; Duke, Keeley, Ricketts et al., 2010), and few report pulling out only finely textured (1 – 6%) or only light-coloured hairs (0 – 2.5%; du Toit et al., 2001; Lochner et al., 2010). Females have been found to endorse these preferences more than males, although the difference was only statistically significant with reference to coarse hair (Duke et al., 2009). The reasoning behind why such “different” hairs are preferentially targeted for removal have not been investigated. However, sensory, cognitive, and emotional models have been proposed to account for the positively and negatively reinforcing characteristics associated with such hair qualities, and hairpulling rituals more broadly (e.g., Mansueto et al., 1997; Penzel, 2003). These will be discussed in Chapter 3.

2.3.2 Hairpulling subtypes. Phenomenological similarities between TTM and OCD led some researchers to hypothesise that there may be TTM subtypes; “one a manifestation of OCD, and the other unrelated to obsessive compulsive pathology” (Christenson, Ristvedt, & Mackenzie, 1993 p. 315). The seminal work of Christenson et al. (1993) identified two distinct cue profiles that elicited hairpulling among 75 adults whose symptoms met modified *DSM-III-R* criteria for TTM. Based upon principal component analysis of the most frequently reported situational and affective hairpulling cues, one component represented cues that involved – or was implied to involve – negative affect (e.g., being embarrassed, looking in a mirror) and the second component reflected cues that involved sedentary or contemplative situations (e.g., reading, studying). Moreover, participants who typically pulled their hair in response to negative affective cues were significantly more likely to focus their attention on their hairpulling

behaviour and to have a history of OCD, obsessive-compulsive personality disorder (OCPD) or any anxiety disorder, compared to participants who pulled in response to sedentary/contemplative cues. Both cue profiles were significantly associated with a history of major depressive disorder (MDD) (Christenson et al., 1993).

Christenson et al. (1993) argued that, for individuals whose hairpulling is strongly influenced by negative affective cues, the more focused nature of their hairpulling episodes may actually be characteristic of the compulsions and rituals featured in OCD or OCPD. Driven by the strong potential for tailoring more effective psychopharmacological and psychological treatments for TTM subtypes, research has since validated the existence of two distinct hairpulling styles in TTM; "focused" and "automatic" (Flessner, Conelea, et al., 2008; Flessner, Woods, et al., 2008).

2.3.2.1 Focused hairpulling. Focused hairpulling has been described as that which occurs with one's attention (focus) directed to the hairpulling behaviour, and which is characterised by preceding tension and subsequent relief (Christenson & Crow, 1996; Duke, Keeley, Ricketts, et al., 2010; du Toit et al., 2001; Lochner et al., 2010). Using this definition, between 25 – 34% of individuals have identified focused hairpulling as their primary style (Duke, Keeley, Ricketts, et al., 2010; du Toit et al., 2001; Lochner et al., 2010). This definition is problematic, however, as the presence of focused hairpulling was simply defined as the endorsement of *DSM-III/IV* diagnostic criteria B and C. Using this definition, in studies that required participants to report themselves as engaging in either primarily focused or primarily automatic hairpulling, few clinical and symptom characteristics were identified that differentiated participants with the two styles nor were the identified characteristics found to be consistent across studies (Duke, Keeley, Ricketts, et al., 2010; du Toit et al., 2001; Lochner et al., 2010). For instance, Duke, Keeley, Ricketts, et al. (2010) found that, compared to primarily

automatic hairpullers, primarily focused hairpullers more frequently pulled out eyelashes; spent more time pulling; reported more distress due to hairpulling; reported more functional impairment due to hairpulling (also reported by Lochner et al., 2010, but for "equally" focused and automatic hairpullers); reported more difficulty stopping or controlling hairpulling; and reported greater frequency of hairpulling. By contrast, du Toit et al. (2001) only found that, compared to primarily automatic hairpullers or those who reported their hairpulling as varying between automatic and focused, primarily focused hairpullers were more likely to pull hair from pubic areas and reported a greater sense of shame.

In developing a measure of the degree to which someone may engage in focused versus automatic hairpulling, Flessner, Woods, et al. (2008, p. 21) defined focused hairpulling as that which is "characterized by […] an almost compulsive quality and includes situations in which an individual pulls in response to negative emotional states (e.g., anxiety, stress, anger, etc.), an intense thought or urge, or in an attempt to establish symmetry." Their measure, the Milwaukee Inventory for Subtypes of Trichotillomania-Adult version (MIST-A; Flessner, Woods, et al., 2008), included a subscale of 10 items designed to reflect the aforementioned operationalised elements of focused hairpulling, which was found to have adequate internal consistency ($\alpha = 0.77$). The MIST-A has since permitted more systematic evaluation of the clinical characteristics that may be unique to the focused style of hairpulling. Among a sample of 1,545 participants who responded to online surveys and whose symptoms met modified *DSM-IV* criteria for TTM, participants with high-focused pulling reported greater TTM symptom severity, depression, anxiety, stress and disability than those with low-focused pulling (Flessner, Conelea, et al., 2008). Compared to those with low-focused and low-automatic pulling, individuals with high-focused but low-automatic

pulling were: more likely to pull from the eyelashes, eyebrows, and pubic regions; reported greater hair loss; avoided social activities; and believed that TTM had contributed to their development of other psychological disorders (Flessner, Conelea, et al., 2008).

2.3.2.2 Automatic hairpulling. Automatic hairpulling has been easier to define; it is characterised by little-to-no awareness during hairpulling behaviour (Duke, Keeley, Ricketts, et al., 2010; du Toit et al., 2001; Flessner, Conelea, et al., 2008; Lochner et al., 2010). Others have additionally suggested that automatic hairpulling be characterised by occurring without any identifiable internal antecedent, such as an emotion, cognition or urge (Wetterneck & Woods, 2007). Between 44 – 67% of individuals have identified automatic hairpulling as their primary style (Duke, Keeley, Ricketts et al., 2010; du Toit et al., 2001; Lochner et al., 2010). Interestingly, individuals who reported their primary hairpulling style as automatic were no more likely than primarily focused pullers to experience depersonalisation during a hairpulling episode (du Toit et al., 2001) even though being in a "trance-like" state is considered a key element of automatic pulling (e.g., Flessner, Conelea et al., 2008).

Compared to primarily focused hairpullers, primarily automatic hairpullers were significantly more likely to report feeling tense, anxious, depressed, angry, and frustrated prior to hairpulling episodes (Duke, Keeley, Ricketts, et al., 2010), contrasting with suggestions that automatic hairpulling is not precipitated by identifiable internal states (Wetterneck & Woods, 2007). Automatic hairpulling has also been described as typically occurring during sedentary activities (Christenson et al., 1993). However, studies have not always found that automatic hairpulling is more likely to occur in these situations than is focused hairpulling. For instance, Duke, Keeley,

Ricketts, et al. (2010) found that primarily focused hairpullers were significantly more likely to pull hair while reading or studying than were primarily automatic hairpullers.

Using the MIST-A, Flessner, Conelea, et al. (2008) were able to systematically evaluate the clinical characteristics associated with automatic hairpulling. Like individuals with high-focused hairpulling, those who endorsed high-automatic levels of hairpulling reported significantly greater TTM symptom severity, stress, and anxiety than participants with low-automatic hairpulling. However, both high- and low-automatic hairpulling was associated with equal levels of depression and disability. Compared to those with both low-automatic and low-focused pulling, individuals with high-automatic but low-focused pulling were less likely to have disclosed their TTM symptoms to someone and more likely to have experienced educational difficulties. These individuals were less likely to spend money concealing their hair loss, however. The researchers speculated that individuals who report high-automatic and low-focused hairpulling may be less likely to seek professional help for TTM despite experiencing some difficulties (Flessner, Conelea, et al., 2008).

2.3.4 Challenges to TTM subtypes. The development of a validated measure of automatic and focused hairpulling styles (the MIST-A) has been important for emphasising that these are indeed *styles of hairpulling* as opposed to *subtypes of TTM*. That is, these hairpulling styles reflect orthogonal dimensions. In support of this, studies that required participants to self-report their primary mode of hairpulling frequently found that as many as 19 – 31% estimated the frequency of their hairpulling episodes to be equally focused and automatic (du Toit et al., 2001; Lochner et al., 2010). Using the MIST-A, Flessner, Conelea, et al. (2008) estimated that among their 1,545 participants with TTM symptoms, only 0.01% could be described as exclusively engaging in one style of hairpulling.

Although the potential to link hairpulling styles or TTM subtypes to specific interventions could enhance treatment outcomes, investigation into the clinical characteristics associated with each style remains preliminary (e.g., du Toit et al., 2001; Flessner, Conelea, et al., 2008; Lochner et al., 2010). Despite suggestions that focused hairpulling may be associated with a preference to distract from or avoid experiencing unpleasant internal states, including emotions (i.e., experiential avoidance; Hayes, Wilson, Gifford, Follette, & Strosahl, 1996), and should therefore be treated with interventions that specifically target emotion regulation skills (e.g., Flessner, Woods, et al., 2008), research validating that emotion regulation is a core function specific to focused hairpulling (as opposed to automatic hairpulling) is lacking. As mentioned earlier, there is some evidence that automatic hairpulling can be precipitated by negative emotions (Duke, Keeley, Ricketts, et al., 2010), thereby implicating an emotion regulation function across both styles of hairpulling. Nor have treatment studies investigated specific reductions to focused hairpulling symptoms as a result of including emotion regulation-based interventions. Similarly, automatic hairpulling has been hypothesised to serve a stimulus-regulation function that provides a source of stimulation when the individual is engaged in sedentary, physically inactive tasks (Penzel, 2003). As such, it has been suggested that automatic hairpulling may be better treated using interventions that increase awareness of the behaviour and its associated antecedents, such as habit-reversal therapy (e.g., Flessner et al., 2012; Flessner, Woods, et al., 2008). Although biopsychological processes were proposed to play a role in the stimulus-regulation functions of hairpulling (Penzel, 2003), research has only investigated such processes in relation to TTM symptoms broadly and not in relation to the two hairpulling styles, individually (for a review, see Chamberlain, Odlaug, Boulougouris, Fineberg, & Grant, 2009; refer also to section 3.4).

Lastly, similar criticisms can be applied to suggestions that TTM subtypes may exist by way of impulsive (reward sensitive) or compulsive (harm avoidant) forms of the disorder (e.g., Hollander, 1993). Although Christenson et al. (1993) speculated that individuals endorsing the negative affect cue profile (and by extension, the focused hairpulling style) may be reflective of a compulsive form of TTM similar to OCD, they cautioned that the existence of two distinct patterns of hairpulling cues does not imply their mutual exclusion of one another. Similarly, they cautioned that the endorsement of a sedentary/contemplative cue profile (and by extension, an automatic hairpulling style) does not predict that the individual's hairpulling is no more or less compulsive in nature (Christenson et al., 1993). Moreover, Flessner et al. (2012) argued that focused hairpulling may actually reflect impulsive processes whereas automatic hairpulling reflects compulsive processes. As heuristics, the focused-automatic and impulsive-compulsive distinctions have generated many hypotheses and models regarding the aetiology of TTM (to be discussed in Chapter 3). However, systematic and rigorous investigation into the validity of these suggestions is lacking, and may even been inappropriate given evidence that such constructs are dimensional and not categorical (Fineberg et al., 2014). Until this improves, the clinical utility of such distinctions remains debated (e.g., Flessner et al., 2012; Wetterneck & Woods, 2007).

2.4 Epidemiology

2.4.1 Prevalence. Non-clinical hairpulling unrelated to grooming or cosmetic purposes has been found to be quite common, with reported rates ranging from 6.5 – 16.5% in community samples (Duke et al., 2009; Ghisi et al., 2013), and 9.7 – 15.5% in student samples (Duke, Keeley, Ricketts, et al., 2010; Rothbaum et al., 1993; Stanley et al., 1994). By contrast, the distressing, chronic hairpulling that is characteristic of TTM has typically been regarded as rare (Duke, Keeley, Geffken, et al., 2010; Miltenberger,

Rapp, & Long, 2006). Indeed, some of the first lifetime prevalence estimates (in child samples) ranged from as low as 0.05% (Schachter, 1961, cited by Duke, Keeley, Geffken, et al., 2010) to 0.5% (Manino & Delgado, 1969, cited by Penzel, 2003). In the absence of rigorous, multi-site, international epidemiological studies in both children and adults, the true prevalence of TTM remains unclear.

To date, the largest TTM prevalence survey in adults was among 2,579 American first-year college students (Christenson, Pyle, & Mitchell, 1991). Applying strict *DSM-III-R* criteria, the authors reported an estimated lifetime prevalence of 0.6%. More recently, a much higher rate of 2.1% was reported among a community sample of 520 adults (M_{age} = 30.0, *SD* = 13.3) in Italy, using strict *DSM-IV-TR* criteria (Ghisi et al., 2013). The highest reported lifetime prevalence using strict *DSM-IV-TR* criteria was among a sample of 791 American college students (M_{age} = 20.0, *SD* = 1.25) at 3.91% (Odlaug & Grant, 2010). However, this rate may have been inflated as a result of using the Minnesota Impulse Disorders Interview, which was modified for use as a self-report tool in the absence of a clinical interview to verify diagnosis (Odlaug & Grant, 2010). When diagnostic criteria omitted either criteria B (tension) or C (gratification, pleasure, relief), or omitted both, lifetime prevalence rates of clinically significant hairpulling that caused distress and/or functional impairment have ranged from 1% to 2.5% (Christenson, Mackenzie, et al., 1991; Duke et al., 2009; King, Zohar, et al., 1995; Rothbaum et al., 1993). Beyond a lack of standardised diagnostic measures used across all studies, inconsistencies in the diagnostic criteria applied and the population sampled has also contributed to the wide variation in reported lifetime prevalence rates.

Finally, the accuracy of prevalence estimates for TTM may be further complicated by under-reporting. Individuals with TTM experience significant shame and embarrassment (Casati et al., 2000; Stemberger, Thomas, Mansueto, & Carter,

2000), and disclosing TTM is associated with negative social evaluation and stigma (Marcks, Woods, & Ridosko, 2005; Ricketts, Brandt, & Woods, 2012). Furthermore, individuals with TTM perceive health professionals to have limited knowledge of TTM and perceive treatments to be ineffective (Cohen et al., 1995; Woods, Flessner, et al., 2006). A survey of health professionals' knowledge of TTM is ufortunately consistent with such perceptions (Marcks, Wetterneck, & Woods, 2006). Combined, the aforementioned factors are likely to deter individuals from disclosure and help-seeking, perpetuating clinical and academic perceptions that TTM is a rare disorder. Assuming a conservative lifetime prevalence estimate of 1% (e.g., Rothbaum et al., 1993; King, Zohar, et al., 1995), over three million Americans (Duke, Keeley, Geffken et al., 2010) and over 200,000 Australians may have TTM. As such, TTM may be more accurately described as a "hidden" disorder as opposed to a rare one (Jefferys, 1995, p. 1224).

2.4.2 Incidence and demographics. Hampered by the same methodological and sampling limitations that affect prevalence studies, reports of the gender distribution of TTM are similarly inconsistent. Using less restrictive *DSM-III-R* diagnostic criteria, Christenson, Pyle, et al. (1991) reported that females had an estimated lifetime prevalence rate of 3.4% and males had an estimated lifetime prevalence rate of 1.5% in their large college sample. By contrast, and regardless of the stringency of diagnostic criteria applied, Ghisi et al. (2013) reported an equal gender distribution at a female to male ratio of approximately 1:1 in their community sample. Odlaug and Grant (2010) similarly reported no significant difference between the number of females (n = 22) and males (n = 9) with clinically significant hairpulling in a college sample, while Duke et al. (2009) reported that 100% (n = 10) of their community participants with clinically significant hairpulling were female. Most studies have reported a much higher proportion of affected females than males, at a ratio of approximately 10:1 (e.g.,

Christenson et al., 1994; Cohen et al., 1995; Flessner, Conelea, et al., 2008; Lochner et al., 2010; Schlosser, Black, Blum, & Goldstein, 1994). Researchers have proposed that this over-representation of females, from clinical populations in particular, may be a result of a treatment-seeking bias as there is greater distress and/or social stigma associated with hair loss for women than for men (Christenson et al., 1994; Duke, Keeley, Geffken, et al., 2010; Ghisi et al., 2013; Penzel, 2003).

While the true prevalence of TTM for males and females remains unclear, the consensus is that there are few sex-based differences in phenomenology. Males have been found to pull from a greater number of bodily areas including facial and abdominal regions, which is likely a result of inherent sex differences in hair growth (Christenson et al., 1994; Ghisi et al., 2013; Lochner et al., 2010). Males also endorse significantly higher rates of comorbid OCD and tic disorders than do females (Christenson et al., 1994; Lochner et al., 2010), while females endorse higher mood and affective symptoms (Christenson et al., 1994; Ghisi et al., 2013). Males have generally been reported to experience later age of onset (range = 15 – 24 years) than do females (range = 13 – 14 years; Christenson et al., 1994; du Toit et al., 2001; Lochner et al., 2010), although this was not found by Cohen et al. (1995). No sex-based differences in symptom severity have been reported (Cohen et al., 1995; Lochner et al., 2010).

Chronic hairpulling has been reported in infants and toddlers as young as 11 months (Aleksandrowicz & Mares, 1978; Franklin et al., 2008; Walther et al., 2014; Wright & Holmes, 2013). In a sample of 108 infants and toddlers seen in two American clinical settings over four years, 9.24% (n = 10) were diagnosed with TTM, although the diagnostic criteria and method of assessment utilised in this study was not described (Wright & Holmes, 2013). However, the research consensus is that hairpulling occurring before age six is typically benign, remits without intervention, and cannot be

diagnosed as TTM due to difficulties in determining the presence of diagnostic criteria relating to internal phenomena (e.g., urges, tension; Bloch, 2009; Duke, Keeley, Geffken, et al., 2010; Flessner et al., 2010; Swedo & Leonard, 1992; Walther et al., 2014). Hairpulling that occurs in very early childhood is therefore more likely to represent a form of stereotypic movement disorder or a habit akin to thumb-sucking (Bloch, 2009; Swedo & Leonard, 1992). Whether this perspective changes with the new *DSM-5* criteria for TTM applied to very young children remains to be seen; indeed, the criteria require validation in paediatric samples, particularly in terms of determining whether a child has demonstrated repeated attempts to stop or decrease hairpulling (criterion B; APA, 2013).

Flessner et al. (2010) found that 80% (n = 1280) of 1,697 internet-surveyed adults meeting modified *DSM-IV* criteria for TTM reportedly commenced hairpulling between ages six to 18 years. In an online survey, approximately 2% of children (n = 133) met modified *DSM-IV* diagnostic criteria for TTM according to parental report. Differences in demographics, phenomenology and symptom severity between children, adolescents and adults are minimal (e.g., Flessner et al., 2010; Flessner, Woods, Franklin, Keuthen, & Piacentini, 2009; Franklin et al., 2008; Walther et al., 2014). Walther et al. (2014) found lower rates of comorbid *DSM-IV* Axis I diagnoses and BFRBs in their sample of 6-to-10 year olds compared to comorbidity rates reported for adults.

There is a paucity of research investigating the epidemiology and phenomenology of TTM in ethnically diverse, non-US samples. Yet hair and hair loss have an important influence upon body image, perceived sense of attractiveness, self-esteem, and identity, which differs across genders and cultures (Hilton, Hunt, Emslie, Salinas, & Ziebland, 2008; Owens Patton, 2006; Synnott, 1987). Studies investigating

TTM in American ethnic minorities (in particular, African-Americans) have found limited differences in demographics, phenomenology and symptom severity compared to Caucasian participants (Dubose & Spirrison, 2006; McCarley, Spirrison, & Ceminsky, 2002; Neal-Barnett et al., 2010; Neal-Barnett & Stadulis, 2006). Compared to Caucasians, African- and Latin-Americans have been reported to experience less tension prior to hairpulling (Neal-Barnett et al., 2010). However, Neal-Barnett, Statom, et al. (2010) cautioned that cultural and language-based differences in definitions of anxiety and tension may contribute to apparent ethnic group differences such as this. Finally, research on TTM in African-American participants has shown that, compared to participants with positive perceptions of their racial identity, participants with negative perceptions of their racial identity are more likely to experience positive emotions during and after hairpulling episodes (Neal-Barnett & Stadulis, 2006). Case studies have also proposed that culturally-bound messages and rituals relating to hair may contribute to the development of TTM in women (Hussain, 1992; Lewis, 2013). However, further research on this issue is required.

2.4.3 Course. Most studies report that TTM has its onset during puberty, with epidemiological studies consistently reporting a mean age of onset between 10-to-14 years (Christenson, Mackenzie, et al., 1991; Cohen et al., 1995; du Toit et al., 2001; Flessner et al., 2010; Lochner et al., 2010). As previously described, males have a somewhat later age of onset than females (Christenson, Mackenzie, et al., 1994; du Toit et al., 2001; Lochner et al., 2010). Despite this early onset, Christenson and Crow (1995) suggested it is not uncommon for individuals to have the disorder for two decades or longer prior to seeking professional treatment. As outlined in section 2.4.1, there are several likely reasons for this, including limited awareness and knowledge of TTM among health professionals, and personal shame and embarrassment that may

deter individuals from disclosing their symptoms and seeking help (Casati et al., 2000; Marcks et al., 2006; Stemberger et al., 2000).

Few studies have investigated psychosocial precipitants contributing to TTM onset (Adamowski, Ledzińska, & Kiejna, 2005; Boughn & Holdom, 2003; Gershuny et al., 2006; Graber & Arndt, 1993; Lochner, du Toit, et al., 2002). Commonly reported precipitating events include individual stressors (e.g., illness, interpersonal conflict or relationship breakdown, changing schools); family stressors (e.g., bereavement, financial stress, relocation, divorce); and trauma (e.g., emotional, sexual or physical abuse; Boughn & Holdom, 2003; Gershuny et al., 2006; Graber & Arndt, 1993). However, studies have relied heavily on retrospective self-report and have not included control groups. The single study that did include a control group found that participants with either TTM or OCD retrospectively reported significantly more childhood trauma than did non-clinical participants (Lochner, du Toit, et al., 2002). Nevertheless, this finding does not suggest that rates of trauma are higher in TTM than they are in other psychological disorders nor does the result imply a causal relationship between childhood trauma and TTM.

TTM has been described as having a chronic, waxing and waning course (Christenson et al., 1994). Three studies have reported an average symptom duration of between 21 and 22 years with very few periods of remission lasting two weeks or longer (Christenson, Mackenzie, et al., 1991; du Toit et al., 2001; Winchel, Jones, Stanley, Molcho, & Stanley, 1992). Among children, hairpulling activity may increase during the school months and reduce during holiday months, prompting speculation that symptoms may fluctuate with stress and anxiety levels (Reeve, Bernstein, & Christenson, 1992). Symptom fluctuation corresponding to the menstrual cycle in females has also been reported (Christenson, Mackenzie, et al., 1991; Keuthen et al.,

1997), with exacerbation of hairpulling frequency, urge intensity, and decreased control over hairpulling occurring in the week prior to menstruation (Keuthen et al., 1997). However, Keuthen et al. (1997) utilised a retrospective self-report methodology, and no further research on this relationship has been conducted.

Although only 5 – 6% of individuals with very early onset hairpulling (i.e., age < 6 years) go on to develop clinically significant TTM symptoms (Cohen et al., 1995; Flessner et al., 2010), these individuals experience a significantly longer duration of unremitting symptoms (mean duration = 16 years, *SD* = 13.61) compared to individuals whose TTM symptoms begin during ages 6 to 18 years (mean duration = 10 years, *SD* = 10.69) or ages 18+ years (mean duration = 5 years, *SD* = 7.44; Flessner et al., 2010). As such, very early onset TTM may represent a more chronic form of the disorder for a minority of afflicted individuals. However, given the paucity of research investigating the developmental trajectory and course of TTM (and in light of recent diagnostic criteria changes), the clinical characteristics or risk factors specifically associated with this minority − or any sub-group − is largely unknown.

TTM has been described as a treatment resistant disorder (cf. Elliott & Fuqua, 2000). Indeed, psychological treatments typically result in significant symptom reductions immediately following treatment completion (e.g., Keuthen et al., 2012; Woods, Wetterneck, et al., 2006), but 50 – 67% of CBT treatment responders relapse by three- to six-month follow-up (Falkenstein et al., 2014). This finding corroborates subjective participant reports that both psychological and pharmacological treatments for TTM lack effectiveness (Cohen et al., 1995; Woods, Flessner, et al., 2006). Research into predictors of relapse is limited. Preliminary research suggests that post-treatment abstinence and low TTM severity at the time of initial treatment response were positive predictors of maintained treatment gains, three months following

completion of an internet-based, self-help behavioural treatment (Falkenstein et al., 2014). Lower pre-treatment depression symptoms have also been implicated in greater treatment gains at follow-up, suggesting that part of the poor prognosis of TTM may be associated with under-treated comorbid depression (Keijsers et al., 2006; Keuthen et al., 2000). Ultimately, the course of TTM can only improve with the development of more effective treatments, which relies upon greater research into relapse predictors and an improved understanding of its aetiology and mechanisms of behavioural change (to be discussed in Chapter 3).

2.4.4 Impact. Hairpulling severity has been found to remain relatively stable across the lifespan, with a median 30 – 70% of hair missing in any age group (range = 10 – 12 years to 49+ years) among females whose TTM symptoms met modified *DSM-IV* criteria (Flessner et al., 2009). This corresponds with the mild to moderate levels of functional impairment and disability across social, interpersonal, academic, and vocational domains that have consistently been reported across age groups in clinical samples (Flessner et al., 2009; Flessner et al., 2010; Walther et al., 2014; Woods, Flessner, et al., 2006). However, it is important to note that preliminary evidence suggests that at least some of the relationship between TTM and disability may be accounted for by comorbid depressive symptoms (Diefenbach, Tolin, Hannan, Crocetto, & Worhunsky, 2005; Woods, Flessner, et al., 2006).

Among a large sample of internet-surveyed (n = 425) and clinically-interviewed (n = 36) participants, over 80% reportedly avoided close friendships and 96% reportedly refrained from intimate relationships at least some of the time (Wetterneck, Woods, Norberg, & Begotka, 2006). Several studies have found that over 50% of participants report avoiding social events, various recreational activities, and going to the hairdresser because of hairpulling (Diefenbach, Tolin, Hannan, et al., 2005; du Toit et al., 2001;

Stemberger et al., 2000; Wetterneck et al., 2006). TTM is also associated with personal economic costs. Up to 94% of internet-surveyed participants reported spending money on products to conceal hairpulling (Wetterneck et al., 2006). Between 22% and 78% of participants reported weekly interference with job duties as a result of hairpulling; 20-45% reported having missed at least one day of work in the previous three months due to hairpulling; and 18% reported having avoided a job interview because of hairpulling (Wetterneck et al., 2006; Woods, Flessner, et al., 2006). Interference with academic responsibilities and performance are also commonly endorsed in both child and adult samples (Franklin et al., 2008; Wetterneck et al., 2006; Woods, Flessner, et al., 2006).

TTM also poses risks to physical health such as skin irritation, infection and repetitive strain injuries (Duke et al., 2009; Sah, Koo, & Price, 2008). Fifty percent of participants reported seeking medical help from a physician for hairpulling although it was not specified whether that help was sought for the hairpulling behaviour itself or for the associated medical sequelae (Wetterneck et al., 2006). Approximately one in five (21%) individuals with TTM ingest the hair (Grant & Odlaug, 2008), which can lead to developing a trichobezoar (i.e., hair ball) in the gut. Although rarely documented in the TTM literature, trichobezoars can cause serious gastrointestinal problems requiring surgery and can be fatal if left untreated (Al-Janabi, Al-Sharbaty, Al-Sharbati, Al-Sharifi, & Ouhtit, 2014; Frey, McKee, King, & Martin, 2005).

Finally, TTM is associated with substantial psychological distress and low self-esteem (Casati et al., 2000; Duke et al., 2009; du Toit et al., 2001; Soriano et al., 1996; Stemberger et al., 2000). Embarrassment, shame, isolation, fear, guilt, frustration, and humiliation were identified as characteristic to the experience of TTM among seven diagnosed women participating in in-depth, qualitative interviews (Casati et al., 2000). Corroborating this qualitative data, survey data indicates that up to 89% of individuals

with TTM experience shame and guilt associated with hairpulling and 81% report associated low mood (du Toit et al., 2001; Stemberger et al., 2000). Compared to healthy participants, participants with TTM have significantly lower self-esteem (Diefenbach et al., 2005; Duke et al., 2009). When controlling for depression symptoms this difference just missed statistical significance ($p = .05$) (Diefenbach et al., 2005). There is conflicting evidence as to whether low self-esteem is predicted by the severity of actual hair loss (Diefenbach et al., 2005) or the severity of hairpulling frequency (Soriano et al., 1996). Participants with TTM have subjectively associated their hair loss to perceptions of physical unattractiveness and poor body image (Casati et al., 2000; Diefenbach et al., 2005). Regarding hairpulling frequency, individuals with TTM have also provided subjective descriptions of the way that perceived lack of control over their own hairpulling behaviour contributes to feelings of ineptness or personal weakness (Diefenbach, Tolin, Hannan, et al., 2005).

2.4.5 Comorbidity. Compared to participants with less severe TTM symptoms, those with highly severe symptoms were more likely to report the perception that TTM had directly led to the development of a comorbid emotional disturbance (Woods, Flessner, et al., 2006). Indeed, as many as 82% of participants with TTM may experience a comorbid Axis I disorder in their lifetime (Christenson, Mackenzie, et al., 1991). Comorbid mood, anxiety, and substance use disorders appear to be most common in TTM (Duke, Keeley, Geffken, et al., 2010). However, the rates vary substantially across studies and there is a strong need to update this literature, given that two editions of the *DSM* have passed since most estimates were published. MDD has been reported in 14 – 55% of participants (Christenson, Mackenzie, et al., 1991; Cohen et al., 1995; Graber & Arndt, 1993; Schlosser et al., 1994; Swedo & Leonard, 1992); lifetime dysthymia in 8 – 36% of participants (Christenson, Mackenzie, et al., 1991;

Schlosser et al., 1994); generalised anxiety disorder (GAD) in 27 – 32% (Christenson, Mackenzie, et al., 1991; Swedo & Leonard, 1992); and substance/alcohol use disorders in 7 – 18% of participants (Christenson, Mackenzie, et al., 1991; Cohen et al., 1995; Schlosser et al., 1994; Swedo & Leonard, 1992).

Lack of clarification regarding the status of TTM as the primary diagnosis; lack of specification in some studies regarding whether comorbidity rates were current or lifetime (e.g., Swedo & Leonard, 1992); and differing age groups sampled (e.g., Graber & Arndt, 1993; Swedo & Leonard, 1992), have likely contributed to the wide variation in these rates. All studies featured small samples of less than 100 participants. The most recent estimates are still derived from small samples but are more consistent. For instance, lifetime comorbid MDD has been reported in 49 – 52% of participants; dysthymia in 2% of participants; and GAD in 20 – 25% (Lochner, Seedat, et al., 2005; Lochner, Simeon, Niehaus, & Stein, 2002).

Early estimates of lifetime prevalence of comorbid OCD ranged between 13% and 27% (Christenson, Mackenzie, et al., 1991; Cohen et al., 1995; Schlosser et al., 1994). More recent estimates have reflected somewhat greater variation in lifetime comorbidity rates, ranging from 7.5% to 29% (du Toit et al., 2001; Lochner, Simeon, et al., 2002; Lochner et al., 2010; Odlaug & Grant, 2008). Rates of comorbid BDD have also varied substantially from 3 – 24% (Christenson & Mackenzie, 1995; Lochner, Seedat, et al., 2005; Soriano et al., 1996). du Toit et al. (2001) and Lochner, Seedat, et al. (2010) found few demographic and phenomenological differences between participants with and without comorbid OCD. Lochner, Seedat, et al. did report a significantly greater number of males with comorbid OCD than females, but this has not been the case in other studies (e.g., Christenson et al., 1994). Although higher than the 1 – 2.5% lifetime prevalence of OCD estimated within the community (Clark, 2004),

some researchers have argued that the comorbidity rates reported to date are not as high as would be expected among two closely related disorders believed to share pathogenesis (see Phillips et al., 2010; Stein et al., 2010). The same has been argued in relation to the comorbidity between TTM and BDD (Christenson & Mackenzie, 1995). Reviews have concluded that comorbidity rates between TTM and impulse control disorders including pathological gambling, intermittent explosive disorder, and pyromania are too low to be clinically meaningful (Phillips et al., 2010).

TTM has consistently been found to share high rates of comorbidity with other BFRBs, including nail-biting, skin-picking, lip-biting, and cheek-chewing (Stein et al., 2008). Between 70% and 85% of individuals with TTM symptoms report comorbid skin-picking and nail-biting behaviours, in particular (Christenson, Mackenzie, et al., 1991; Stein et al., 2008). One literature review including 10 studies calculated that, on average, 21% of individuals with TTM experienced comorbid SPD (Snorrason, Belleau, & Woods, 2012). The authors concluded that this rate was much higher than would be expected by chance. However, they cautioned that few studies included a psychiatric control group for comparison of comorbidity rates, and the operationalisation of SPD diagnosis was variable (Snorrason et al., 2012), given that SPD was not yet a validated disorder with *DSM* criteria. Significant associations between BFRBs and hairpulling severity have also been reported (du Toit et al., 2001; Hajcak, Franklin, Simons, & Keuthen, 2006; Stein et al., 2008), and TTM and SPD share strikingly similar phenomenological and demographic characteristics (Lochner, Simeon, et al., 2002; Odlaug & Grant, 2008; Snorrason et al., 2012). As such, several researchers have argued that TTM and SPD, in particular, may share aetiological mechanisms (Snorrason et al., 2012; Stein et al., 2008; Stein et al., 2010).

Relatedly, comorbidity rates between TTM and tic disorders (including TS) are also higher than is reported in the general population (Ferrão et al., 2009). Shared phenomenology between TTM and tic disorders/TS (e.g., unintentional, but poorly controlled repetetitive behaviour; physiological tension preceding the behaviour) has similarly led researchers to speculate about shared aetiological and maintaining processes among these disorders (Ferrão et al., 2009; O'Connor, St-Pierre-Delorme, Leclerc, Lavoie, & Blais, 2014). Much more research on the prevalence of BFRBs in other OCRDs, and the psychobiology of TTM, SPD, and tic disorders/TS is required to assert such claims, however (Snorrason et al., 2012; Stein et al., 2008).

High rates of comorbid personality disorders have been reported in early studies, ranging from 38 – 55% (Christenson, Chernoff-Clementz, & Clementz, 1992; Schlosser et al., 1994; Swedo & Leonard, 1992). Borderline personality disorder (BPD) and OCPD have been reported most consistently across studies, with comorbidity rates ranging from 7 – 14% and 13 – 27%, respectively (Lochner et al., 2005; Schlosser et al., 1994; Swedo & Leonard, 1992). However, significantly higher rates of any personality disorder were reported in outpatient psychiatric patients (n = 48) compared to participants with TTM (n = 48) matched for sex and age (Christenson et al. 1992). Only one participant with TTM received a comorbid diagnosis of BPD in this study. More recently, Lochner, Seedat, et al. (2005) reported a significantly greater preponderance of OCPD among 130 women with OCD compared to 49 women with TTM.

Investigation of personality traits associated with TTM has been limited. Using the Tridimensional Personality Questionnaire (TPQ; Cloninger, 1987; Cloninger, Przybeck, & Svrakic, 1991), TTM has been associated with very high levels of reward dependence, high levels of harm avoidance, and average levels of novelty seeking according to validated norms, as has been similarly reported in SPD and OCD (Lochner,

Simeon, et al., 2002). Trait anxiety has been found to predict repetitive hairpulling resulting in hair loss in 1,453 individuals diagnosed with a lifetime *DSM-IV* eating disorder (i.e., anorexia nervosa; bulimia nervosa; eating disorder not otherwise specified; Zucker et al., 2011). One study reported that BPD-related personality traits were characteristic of TTM on the basis of score patterns on the neuroticism and agreeableness facets of the Neuroticism-Extraversion-Openness Personality Inventory Revised (NEO-PI-R; Hagh-Shenas, Moradi, Dehbozorgi, Farashbandi, & Alishahian, 2004). However, no assessment to verify the presence of actual BPD symptomatology was performed in this study, nor is the NEO-PI-R a measure of psychopathological personality traits. Recent research similarly reported that high neuroticism and low agreeableness, but also high levels of openness to experience, was associated with hairpulling severity (Keuthen, Tung, Blais, Pauls, & Flessner, 2015). Whether these personality traits predispose individuals to developing TTM or are a consequence of the disorder and its psychosocial impact needs to be subject to longitudinal research. Comparing Minnesota Multiphasic Personality Inventory-2 profiles between sex- and age-matched TTM and psychiatric outpatients, Christenson et al. (1992) found no specific personality traits that were uniquely characteristic of participants with TTM.

2.5 Summary

This chapter presented a historical account of the diagnostic conceptualisation and criteria of TTM before reviewing its phenomenology, epidemiology, impact and comorbidity. TTM involves the repetitive removal of hair causing hair loss most often from the scalp, eyelashes, eyebrows, and pubic regions. TTM predominantly affects females; develops during puberty; and is a chronic and unremitting disorder. It is also now understood to be much more prevalent than once thought, affecting between 1 – 4% of the population (Christenson, Mackenzie, et al., 1991; Ghisi et al., 2013; Odlaug

& Grant, 2010; King, Zohar, et al., 1995). Two distinct styles of hairpulling – focused and automatic – have been identified and validated (Flessner, Woods, et al., 2008). The clinical utility of hairpulling style identification remains to be determined, however, given that less than 0.01% of individuals exclusively engage in one over the other (Flessner, Conelea, et al., 2008), and replication of style-specific clinical correlates is still preliminary.

TTM has a profound impact upon the self-esteem and daily functioning of those afflicted, and is most commonly comorbid with mood, anxiety and substance/alcohol use disorders (Duke, Keeley, Geffken, et al., 2010). Many individuals attribute their development of these comorbidities to the psychosocial impact of TTM (e.g., Woods, Flessner, et al., 2006). Health professionals have a poor understanding of TTM and its treatment (Marcks et al., 2006), which serves to perpetuate its associated stigma, limited awareness in public and healthcare domains, and ultimately, deter affected individuals from seeking help.

This inadequate understanding of TTM is reflected in past and ongoing issues with its diagnostic criteria and classification. Past diagnostic criteria was criticised for excluding a significant proportion of individuals from receiving a clinically justified diagnosis of TTM (Stein et al., 2010). *DSM-5* criteria (APA, 2013) is now more inclusive of these individuals, however, it still remains debatable as to whether the new criterion B ("repeated attempts to stop or decrease pulling") truly captures the "driven" nature of hairpulling – the operationalisation of which, requires further consideration. The new classification of TTM from an impulse control disorder to an OCRD is also contentious (Phillips et al., 2010; Stein et al., 2010), partly because it is increasingly becoming clear that TTM is a complex and highly heterogeneous disorder that does not necessarily fit into a strictly categorical impulsive or compulsive conceptualisation (e.g.,

Flessner et al., 2012). This issue will be further examined in the following chapter, which reviews the various aetiological models and explanations that have been proposed to account for the development and maintenance of TTM.

3. CHAPTER 3 – Conceptual Models of Trichotillomania

3.1 Introduction

Various conceptual models and explanations have been proposed to account for the development and maintenance of TTM, and these will be comprehensively reviewed in this chapter. While models of putatively related disorders (e.g., OCD) have rich theoretical underpinnings and supporting evidence, this chapter will demonstrate that most aetiological accounts of TTM remain in the early stages of development and validation. Where relevant, explanations regarding the role of cognitions and beliefs in each model will be examined as per the central focus of this thesis. In doing so, it will become clear that cognitions have typically been underestimated as influential factors in TTM, and that an integrated, comprehensive, and empirically-supported cognitive behavioural model of TTM has not yet been developed.

3.2 Psychodynamic Explanations

Psychodynamic theory espoused the symbolic importance of skin and hair (Barahal, 1940; Zaidens, 1951a, 1951b). Being "the first organ of contact to develop a relationship to the outside world" (Zaidens, 1951b, p. 388), the relational and communicative power of both the skin and hair meant that their purported psychodynamic functions across the stages of psychosexual development were multifaceted (Monroe & Abse, 1963). Broadly, psychodynamic explanations posited three key functions of hairpulling: (1) the repression of psychosexual conflict; (2) a reaction to dysfunctional family dynamics; and (3) as a means of processing real or perceived object (attachment) loss.

For females in particular, hair is symbolic of beauty, femininity, sexuality, seduction, and fertility (Barahal, 1940; Graber & Arndt, 1993; Hussain, 1992; Krishnan,

Davidson, & Guajardo, 1985; Zaidens, 1951a). Compulsive hairpulling was perceived as a manifestation of conflicts arising from repressed sexual impulses, bisexuality, gender identity issues, a rejection of femininity, penis envy, or castration anxiety (Barahal, 1940; Berg, 1951; Greenberg, 1969; Monroe & Abse, 1963; Schnurr & Davidson, 1989; Singh & Maguire, 1989; Sperling, 1968; Tattersall, 1992; Zaidens, 1951a). Empirical support for such psychosexual conflicts in the elicitation of TTM symptoms is limited. Sexual abuse has been described in TTM case studies as an aetiological factor, with hairpulling conceptualised as an attempt to psychologically escape from "unbearable sexual situation[s]" (Zaidens, 1951a, p. 400), or as a form of internalised aggression or self-punishment (Barahal, 1940; Singh & Davidson, 1989). Although rates of childhood trauma including sexual abuse are high in TTM (Boughn & Holdom, 2003), they are no higher than in putatively related psychological disorders such as OCD, and a causal link is yet to be established (Lochner, du Toit, et al., 2002). Nevertheless, the notion that hairpulling facilitates avoidance of emotional distress – trauma-related or otherwise – has received empirical support (e.g., Begotka, Woods, & Wetterneck, 2004), and is a topic of ongoing research.

Psychodynamic accounts of family functioning in children and adolescents with TTM proposed that hairpulling was a physical expression of unresolved aggression and conflict stemming from codependent mother-child relationships (Buxbaum, 1960; Galski, 1983; Greenberg & Sarner, 1965; Rechenberger, 1976). Based on their observations of 19 children and adolescents with TTM (n = 16 female), Greenberg and Sarner (1965) described the majority of participants' mothers as critical, overprotective, and "alternately infantilizing and parentifying" (p. 435). Mother-daughter relationships were reportedly characterised by a symbiosis of mutual dependence, separation anxiety, ambivalence, hostility and provocation (Greenberg, 1969; Greenberg & Sarner, 1965).

By contrast, the majority of fathers were deemed passive and emotionally distant. Contemporary research on the relationship between TTM and family functioning remains preliminary. According to online parent-report surveys of 133 children and adolescents with TTM symptoms, greater disruption to familial role performance and affective expression was associated with greater symptom severity (Moore et al., 2009). A single study has matched adolescents with TTM (n = 49) and their families to a control group of adolescents (n = 23) and their families to compare issues of family dysfunction (Keuthen, Fama, Altenburger, Allen, & Pauls, 2013). Keuthen et al. (2013) found significantly greater expression of anger, aggression and conflict, and significantly less emotional support in TTM families than in control group families. Moreover, both forms of familial dysfunction were associated with greater hairpulling distress. Supporting Moore et al. (2009), symptom severity was again associated with greater impairment in affective expression, however, affective expression was not significantly more impaired in the TTM group compared to the control group. Feelings and expression of anger were also greater among mothers of adolescents with TTM than among control group mothers, although TTM mothers' average scores were still within population-based normative ranges (Keuthen et al., 2013). Due to the cross-sectional nature of this study, the direction of the relationship between difficulties of family functioning and TTM could not be determined.

Finally, actual, threatened or perceived separation from important attachment relationships (i.e., "love objects") has also been speculated to act as an antecedent to TTM development (Buxbaum, 1960; Galski, 1983; Greenberg, 1969; Lewis, 2013). Early psychodynamic theories viewed hair as an "intermediary object" that represented both positive and negative associations with one's attachment relationships (particularly with one's mother). As such, hairpulling was believed to provide comfort or self-

soothing when confronted with the loss of, or separation from, an attachment figure (Buxbaum, 1960). Most recently, Lewis (2013) reviewed hair-related mourning and grief rituals across history and cultures. Lewis argued that rituals that were historically associated with bereavement and grief (including hairpulling rituals) have since become pathologised due to modern society's avoidance and denial of death. Drawing upon her personal experiences with TTM and clinical cases, Lewis proposed that hairpulling may represent a "dissociative language or ritualised 'body dialect' that both expresses and disavows feelings and memories pertaining to traumatic, unmourned death and loss" (p. 205). In other words, hairpulling affords the physical expression of traumatic grief and loss that cannot (or ought not) be overtly expressed. Some individuals with TTM have retrospectively reported their first hairpulling episode to have commenced in response to the death of a family member or some other form of relationship loss, such as parental divorce (Boughn & Holdom, 2003; Graber, 1993). However, no longitudinal or control group comparative studies have been performed to determine if such events are causal or unique precipitants of TTM development; just as the role of grief and loss in TTM itself has not been evaluated.

Psychodynamic explanations of TTM have historically not been supported with empirical evidence, and as such, they remain largely unexplored in contemporary TTM research. Although each explanation is bound by the sociocultural context within which it was developed, what is arguably common to all three theories is the notion that hairpulling may result from and/or facilitate the avoidance or maladaptive expression of distressing affect. Indeed, third-wave cognitive behavioural treatments of TTM (e.g., Keuthen et al., 2010; Woods, Wetterneck, et al., 2006) have begun to target emotion dysregulation as a potential behaviour change mechanism, on the basis of increasing

evidence in support of its role in TTM. This body of research will be reviewed in section 3.6.2.

3.3 Phenomenological Models

Despite its initial *DSM* classification as an impulse control disorder not elsewhere classified (APA, 1987, 1994, 2000), TTM has long been likened to OCD. For instance, Tynes, White, and Steketee (1990) suspected that at least some hairpulling in TTM serves an anxiety-reducing function similar to compulsions in OCD. Tynes et al. (1990) further suggested that, like TTM, several other disorders featuring impaired impulse control (e.g., Tourette's syndrome, kleptomania, exhibitionism) may even be considered variants of OCD due to their featuring behavioural or cognitive compulsions and "focal anxiety" (p. 465). Hollander and colleagues (Berlin & Hollander, 2014; Hollander, 1993; Hollander, Baker, Kahn, & Stein, 2006; Hollander & Wong, 1995; Stein & Hollander, 1995) extended these suggestions by providing a phenomenological framework for understanding the relationships between obsessive-compulsive (OC) spectrum disorders based on the extent to which candidate spectrum disorders featured repetitive behaviours reflective of compulsivity versus impulsivity.

The OC spectrum conceptualisation of TTM has been highly influential, with much of what is known about its aetiology having been derived from comparing the phenomenology, epidemiology, comorbidity, neurobiology, familiality, and treatment response of TTM with putatively related OC spectrum disorders; OCD, in particular. The aim of this section is not to establish whether, or to what extent, TTM is indeed related to specific OC spectrum disorders, as comprehensive reviews on this matter have been performed elsewhere (Ferrão et al., 2009; O'Sullivan, Mansueto, Lerner, & Miguel, 2000; Phillips et al., 2010; Stanley & Cohen, 1999; Stein et al., 2010). Rather, a

brief overview of the main arguments and evidence in relation to compulsive-impulsive conceptualisations of TTM will be given. This provides important context for understanding the development, evaluation and limitations of aetiological models that have since been developed, and are described throughout this chapter.

Each disorder considered for inclusion within the OC spectrum was considered to feature repetitive, poorly suppressed behaviours and/or cognitions motivated by varying levels of harm avoidance and anxiety reduction (i.e., compulsivity) on one end of the spectrum versus risk-, reward- and/or stimulation-seeking (i.e., impulsivity) on the opposite end of the spectrum (Hollander, 1993; Hollander et al., 2006; Hollander & Wong, 1995). These definitions of compulsivity and impulsivity are clearly grounded in phenomenology, but are assumed to reflect underlying psychobiological mechanisms that may be responsible for the development and maintenance of the OC spectrum disorders (Hollander, 1993; Hollander & Wong, 1995), as will be elaborated in section 3.4. As a result of such broad inclusion criteria, a wide variety of mood, anxiety, impulse control, personality, developmental, neurological, somatic, and eating disorders have been proposed as candidate OC spectrum disorders (Starcevic & Janca, 2011). Another key assumption of early OC spectrum conceptualisations was that compulsivity and impulsivity were considered to be polar opposites (Hollander & Wong, 1995). OCD was considered the prototypical compulsive disorder to which all other candidate disorders were compared for their placement along the compulsive-impulsive spectrum. A prototypical disorder of impulsivity was not consistently established across iterations of the OC spectrum heuristic (which is likely a reflection of the multifaceted nature of this construct; Evenden, 1999), but TTM was consistently situated within the centre of the compulsive-impulsive axes as both characteristics are considered prominent

motivators of hairpulling behaviour (e.g., Berlin & Hollander, 2014; Hollander et al., 2006; Hollander & Wong, 1995).

Several elements of TTM phenomenology bare resemblance to the compulsions of OCD. Hairpulling behaviours in TTM and compulsions in OCD are difficult to resist and control (Tükel, Keser, Karali, Olgun, & Çalikuşu, 2001) but unlike compulsions in OCD, hairpulling is typically not preceded by obsessions (Stanley & Cohen, 1999) and overall levels of obsessionality are significantly lower in TTM (Ferrão, Almeida, Bedin, Rosa, & Busnello, 2006; Stanley, Swann, Bowers, Davis, & Taylor, 1992; Tükel et al., 2001). However, some individuals with TTM do experience a preoccupation with hair-related symmetry that may be classified as obsessional (Mansueto et al., 1997), although research on specific obsessions in TTM, including symmetry obsessions, has not been conducted to explore their presence, content or prevalence as hairpulling cues. Regardless, 40 – 45% of individuals with TTM have been reported to pull hair in a symmetrical manner at least "a little of the time" (Christenson, Mackenzie, et al., 1991; Woods, Flessner, et al., 2006), which may be comparable with ordering or arranging compulsions corresponding with a need for symmetry in OCD (see Radomsky & Rachman, 2004). Similarly, the ritualised manner with which hairs are selected, plucked, manipulated and discarded is redolent of the ritualised nature of compulsions in OCD, although TTM rituals are less rule-based, less complex, and more focused upon a narrower behavioural focus (i.e., hairpulling; Ferrão et al., 2009; Woods & Houghton, 2014). Individuals with TTM also report pulling hairs to achieve a "just right" cognitive-sensory experience that is similar to the desired sense of closure, perfection or completeness that can drive compulsions in OCD, and tics in TS. (Ferrão et al., 2009; O'Connor, 2002; Sica et al., 2015). Additionally, hairpulling triggered by negative emotions (e.g., being embarrassed) or situations expected to trigger negative

emotions (e.g., public speaking) were found to be associated with focused hairpulling, and comorbid OCD, OCPD, depression, and anxiety. By contrast, hairpulling in response to sedentary/contemplative cues (e.g., reading) was not associated with these variables (Christenson et al., 1993). Christenson et al. (1993) suggested that hairpulling specifically triggered by negative affect may be a form of compulsive hairpulling, similar to OCD compulsions. Taken together, these features represent the compulsive aspect of focused hairpulling when its motivational drive is to alleviate tension, anxiety or distress elicited by an urge, cognition (e.g., desire for symmetry) or emotion (Flessner, Woods, et al., 2008).

However, focused hairpulling can equally be performed for the purpose of experiencing pleasure or gratification, which is core to the impulsivity construct (Flessner et al., 2012; Hollander et al., 2006; Hollander & Wong, 1995). As per previous *DSM* criteria, pulling to achieve a sense of pleasure or gratification was once considered an essential feature of TTM phenomenology (APA, 1987, 1994, 2000), whereas pleasure is not associated with OCD (Stanley et al., 1992). Using a sample of 210 adults with OCD, Lochner, Hemmings, et al. (2005) performed a cluster analysis of comorbid OC spectrum disorders. Three clusters were identified: reward deficiency, impulsivity, and somatic. TTM was part of the reward deficiency cluster along with gambling disorder, TS, and hypersexual disorder, which was justified on the basis of dopaminergic dysfunction implicated in these disorders (Blum et al., 2000). Similarly, TTM participants have reported very high levels of reward dependence compared to normative community data as measured by the TPQ (Lochner, Simeon, et al., 2002), and compared to OCD patients (Stein et al., 1995). Participants with TTM (n = 21) have also been found to report significantly higher scores on novelty seeking than OCD participants (n = 68), whereas OCD participants scored significantly higher on harm

avoidance (Lochner, Seedat, et al., 2005). However, compared to community normative data, the level of novelty seeking reported in this TTM sample and in other TTM samples (e.g., Lochner, Simeon, et al., 2002; Zucker et al., 2011) is actually within average ranges. Additionally, participants with TTM have reported higher levels of harm avoidance in comparison with community normative data (Lochner, Simeon, et al., 2002). These personality findings are consistent with the mixed compulsive-impulsive phenomenology of TTM, which has similarly been reflected in neuropsychological tests of motor response inhibition (see section 3.4.4; Bohne, Savage, Deckersbach, Keuthen, & Wilhelm, 2008).

The mixed presentation of compulsive and impulsive phenomenology in TTM has led researchers to develop two broad aetiological explanations, neither of which is mutually exclusive. The first explanation is that there may be two distinct subtypes of TTM; an addiction-like subtype that is characterised primarily by impulsivity (Grant, Odlaug, & Potenza, 2007), and contrasts with an OCD-like subtype that is characterised primarily by compulsivity (Christenson et al., 1993). The second explanation is that the roles of compulsivity and impulsivity in TTM are not necessarily opposing, but contribute in varying degrees to the development of what is a complex phenotype (Flessner et al., 2012). Each explanation is discussed in turn.

Grant et al. (2007) proposed the existence of an addiction-like subtype based upon the impulse-driven phenomenology reviewed above (i.e., hedonic reward seeking), in addition to an “appetitive urge or craving state” (p. 81) that may drive hairpulling. The proposed subtype involves repeated pulling despite adverse consequences and limited control over pulling. As previously discussed, however, these phenomenological characteristics can equally be driven by compulsivity. Evidence for an appetitive urge or craving state is limited to surveys inquiring about the presence of urges but not their

driving motivation (e.g., Woods, Flessner, et al., 2006), meaning that an indication of their impulsive versus compulsive quality cannot be established. Grant et al. additionally cited evidence of higher rates of alcohol and substance use disorders among first-degree relatives of individuals with TTM compared to HC participants (Schlosser et al., 1994), which could suggest a vulnerability to developing addictive behaviours. Indeed, individuals with more severe self-reported TTM symptoms are significantly more likely to use tobacco, alcohol, and illicit substances to relieve associated urges and distress than are individuals with less severe TTM symptoms (Woods, Flessner, et al., 2006). Similar maladaptive cognitions to those that are thought to be related to the cravings, urges, and maintenance of substance abuse (e.g., permission-giving beliefs that enable the behaviour) have been proposed as antecedent and maintaining factors of TTM (Gluhoski, 1995). Whether these characteristics may be attributed to a discrete addiction subtype of TTM is yet to be validated. No studies have involved direct comparison of TTM samples with alcohol/substance or behavioural addiction (e.g., gambling disorder) samples in terms of shared or distinct phenomenological, clinical or psychobiological characteristics. To establish the existence of a discrete addiction-like subtype of TTM that is distinct from an OCD-like subtype, such research will be essential.

Turning to the second explanation, Flessner et al. (2012) argued for a dimensional approach to considering the role of compulsivity and impulsivity in TTM; both phenomenological characteristics are strongly featured in the focused hairpulling style as reviewed earlier, but can similarly be observed in the automatic hairpulling style. For instance, automatic hairpulling may be conceptualised as a failure to inhibit pre-potent motor behaviours, which is one of the core neuropsychological features of impulsivity (to be discussed in section 3.4.4; Chamberlain & Sahakian, 2007; Fineberg

et al., 2010, 2014). This corresponds with subjective reports by individuals with TTM that they lack control over their hairpulling behaviour, especially once it is initiated (e.g., Casati et al., 2000). Automatic hairpulling may also be considered compulsive in that it entails a habitual behaviour that serves no adaptive purpose; in other words, automatic hairpulling is not goal-driven, which means the behaviour is insensitive to outcomes or consequences and is therefore difficult to extinguish (Fineberg et al., 2014).

The argument for a dimensional conceptualisation of compulsivity and impulsivity in TTM mirrors that of Fineberg et al. (2014) regarding the characterisation of a range of disorders in which these processes are implicated; "rather than polar opposites, compulsivity and impulsivity may represent orthogonal factors that each contribute in varying degrees to the development of these disorders" (p. 70). In contrast to splitting TTM phenomenology into a compulsive and an impulsive/addictive subtype, which risks minimising the vast variation in phenomenology, epidemiology, comorbidity, and treatment response observed across TTM samples (and may similarly stunt development of effective treatments), a dimensional view challenges researchers to expand the theoretical and methodological ideology from which they conceptualise and investigate TTM.

Indeed, neuropsychological, neuroimaging, genetic, pharmacological, developmental, and behavioural learning research has all contributed to the expansion of the primarily phenomenologically-based understanding of compulsivity and impulsivity. Compulsivity and impulsivity are now understood as complex, multidimensional constructs (Fineberg et al., 2014). Beyond a harm avoidance motivational drive and repetitive behaviour, for instance, compulsivity is now understood to reflect deficits in contingency-based cognitive flexibility, attentional set-

shifting, attentional bias/disengagement, and habit learning (although the operationalisation of, and research into, compulsivity lags behind that of impulsivity; Fineberg et al., 2014). Impulsivity is broadly subdivided into motor response inhibition, decision-making biases, and choice and reflection impulsivity (Fineberg et al., 2014). These neurocognitive functions are themselves believed to reflect neuroanatomical and neurochemical deficits and/or dysfunction, as the OC spectrum model has always postulated (e.g., Berlin & Hollander, 2014; Hollander, 1993; Hollander et al., 2006; Hollander & Wong, 1995). In this sense, it is plausible that categorical and dimensional compulsive-impulsive conceptualisations of TTM as a complex phenotype (Flessner et al., 2012) are not necessarily mutually exclusive. Varying combinations of the multifaceted functions and expressions of compulsivity and impulsivity have recently been hypothesised to form the unique psychobiological profiles of between six and 10 discrete TTM subtypes (Grant, 2015). This fine-grained research is in its infancy, and has been inspired by the broader research that is the focus of the following section.

3.4 Psychobiological Explanations

Genetic studies, ethological models, neuroimaging, and neuropsychological studies have attempted to identify possible biological markers that point to the aetiological origins of TTM. Findings pertaining to compulsive-impulsive spectrum disorders (e.g., OCD, TS, attention-deficit hyperactivity disorder [ADHD], alcohol/substance dependence) have typically been used to steer much of this research in TTM. The vast majority of this research has utilised OCD as a clinical comparison group, and while it has discovered many similarities, there are also key differences between TTM and the compulsive-impulsive spectrum disorders.

3.4.1 Genetic and family studies. Several case reports have identified that non-cosmetic hairpulling runs in families (for a summary, see Christenson, Mackenzie, & Reeve, 1992). Christenson, Mackenzie, et al. (1992) reported that, of 161 of children, adolescents, and adults with TTM seen at their outpatient clinic, 8% (n = 13) had first-degree relatives who also engaged in hairpulling. The authors suggested that a hereditary predisposition to TTM may be an important aetiological factor, but heeded previous case reports in which hairpulling appeared to have been learnt via modelling from parents or siblings. More recently, risk estimates were found to be significantly higher among first-degree relatives of TTM probands (n = 110 families) compared to HC participants (n = 48 families), providing further support for the heritability of TTM (Keuthen, Altenburger, & Pauls, 2014). To determine whether such higher-than-expected rates are indicative of genetic influences, Novak, Keuthen, Stewart, and Pauls (2009) conducted a twin concordance study of 34 same-sex twin-pairs in which one twin experienced TTM symptoms. Twenty-four twin pairs were monozygotic (MZ) and 10 were dizygotic (DZ). MZ and DZ concordance rates were, respectively, 0.38 and 0.00 (p = .0047) for full *DSM-IV-TR* criteria; 0.39 and 0.21 (p = .021) for modified *DSM-IV-TR* criteria; and 0.58 and 0.20 (p = .046) for non-cosmetic hairpulling (Novak et al., 2009). Heritability estimates ranged from 76 – 78% for the three diagnostic levels. Novak et al. (2009) concluded that there is a strong genetic contribution to the onset of TTM phenomenology, however, as MZ concordance rates were not 100% there are still important environmental factors that contribute to its development.

Higher-than-expected rates of OCD in first-degree relatives of TTM probands have also been reported (Keuthen et al., 2014; King, Scahill, et al., 1995; Lenane et al., 1992). Keuthen et al. (2014) additionally found evidence for a familial subtype of TTM that is comorbid with OCD (TTM+OCD), as suggested by higher than expected rates of

relatives with TTM+OCD among comorbid probands, but no relatives of TTM-only probands who were diagnosed with TTM+OCD. Given the phenomenological overlap between these disorders, and pharmacological treatment outcomes that suggest that serotonergic and dopaminergic neurotransmitter systems are implicated in both TTM and OCD, researchers have investigated whether candidate genes that are responsible for encoding components of these neurotransmitters are biomarkers for TTM development (Hemmings et al., 2006). Several candidate genes were compared between 39 participants with TTM, 250 participants with OCD and 152 HCs matched for age, and derived from a Caucasian population in South Africa. Hemmings et al. (2006) found that significantly more TTM participants possessed the serotonergic-based T102T genotype than did HCs (p = .024). A statistically significant difference in the same direction was also found in comparison to the OCD group, but was attenuated after correction for multiple analyses (p = .084). Although the role of its associated polymorphism (T1O2C) is debated, Hemmings et al. speculated that if associated with increased expression of serotonergic receptors, the resulting alteration to serotonin transmission may act as a risk factor for TTM.

Limited research has also found that mutations to the SLITRK1 and SAPAP3 genes (implicated in TS and OCD, respectively) may account for approximately 4 – 4.5% of TTM cases (Züchner et al., 2006; Züchner et al., 2009). SAPAP3 genetically mutated mice have been found to engage in fur and whisker plucking (i.e., barbering) to the point of balding and skin lesions, and were successfully treated with fluoxetine, a selective serotonin reuptake inhibitor (SSRI; Welch et al., 2007). Nevertheless, research into the role of genetics in TTM onset remains preliminary (for a review, see Chatterjee, 2011). Further genetic testing in analogue animal models of TTM may prove fruitful,

particularly to examine the influence of environmental triggers for such hair-plucking behaviours on candidate gene expression (i.e., epigenetic studies).

3.4.2 Analogue animal models. Ethological models seek to determine the function and origin of human behaviour by referring to analogous behaviour in animals. Grooming in both animals and humans serves an adaptive purpose primarily to support hygiene and health, but it also serves a socially adaptive purpose (Spruijt, van Hooff, & Gispen, 1992). Grooming also serves a regulatory function for body temperature, arousal, stimulation, and emotion (Moon-Fanelli, Dodman, & O'Sullivan, 1999; Swedo, 1989). Given this adaptive significance, grooming behaviour may be conceptualised as an innate, fixed-action pattern; an "internally coordinated sequence, that merely requires a releasing stimulus for actualization" (Swedo, 1989, p. 294). Fixed-action patterns can be initiated in response to both innate and conditioned stimuli, and once initiated, the behavioural sequence is completed whether it is necessary or not (Swedo, 1989). Excessive grooming behaviours in humans may therefore be conceptualised as the inappropriate release of fixed-action patterns, which become compulsive or habitual over time (Feusner, Hembacher, & Phillips, 2009; Swedo, 1989; Swedo & Rapoport, 1991).

Indeed, animal models of TTM and OC spectrum disorders have been derived from observations of excessive grooming behaviours in dogs (e.g., acral lick dermatitis), cats (e.g., psychogenic alopecia), parrots (e.g., psychogenic feather picking), and rodents (e.g., barbering; for reviews, see Feusner et al., 2009; Moon-Fanelli et al, 1999). On a phenomenological level, the repetitive hairpulling characteristic of TTM appears similar to the repetitive grooming behaviours engaged in by many animals, the most researched of which is excessive barbering occurring in mice. Two distinct models have emerged in relation to mice; genetically modified models in which the Hoxb8 (Greer &

Capecchi, 2002) and SAPAP3 (Welch et al., 2007) genes are deleted, and the spontaneously occurring barbering model of laboratory mice (Garner, Weisker, Dufour, & Mench, 2004). Both genetically-modified and spontaneously-barbering mice exhibit excessive barbering that is not attributable to abnormal sensory perception or skin inflammation/irritation (Garner et al., 2004; Greer & Capecci, 2002; Welch et al., 2007). However, the mutated mice do not show evidence of a female-predominance of barbering; they typically barber to the point of causing significant tissue damage; and the Hoxb8 mice also feature skeletal deformations; none of which is characteristic of TTM (Garner et al., 2011). Moreover, barbering onset in both Hoxb8 and SAPAP3 knockout mice is 100% genetically mediated, leaving no role for environmental factors in its development.

By contrast, non-genetically modified laboratory mice that spontaneously engage in barbering demonstrate striking similarities with TTM in terms of phenomenology, epidemiology, genetic factors, neurobiology, and exacerbating environmental and social factors (for a comprehensive review, see Dufour & Garner, 2010). For instance, Garner et al. (2004) found a clear female sex-bias among barbering laboratory mice, and reported that barbering onset was commensurate with sexual maturation and associated with reproductive events. Similarly, TTM severity has been reported to fluctuate with the menstrual cycle (Keuthen et al., 1997). Moreover, particular genetic strains of laboratory mice demonstrated significantly greater barbering prevalence than did other strains (Garner et al., 2004), reflecting preliminary findings that certain genetic phenotypes are associated with higher-than-expected TTM prevalence (Züchner et al., 2006, 2009).

Furthermore, there is experimental evidence suggesting that spontaneous barbering is associated with specific neuropsychological markers that have similarly

been implicated in TTM, namely, cognitive set-shifting (Bohne, Keuthen, Tuschen-Caffier, & Wilhelm, 2005; Garner et al., 2011). Using a validated version of the intra-dimensional extra-dimensional set-shifting task for mice (Garner, Thogerson, Würbel, Murray, & Mench, 2006), Garner et al. (2011) reported that barbering mice were found to make significantly more errors during the extra-dimensional shift stage compared to non-barbering mice. In other words, barbering mice demonstrated a tendency to make perseverative errors in the face of changing response-set rules. Moreover, this perseverative response pattern of barbering mice was distinguishable from the response-inhibition deficits found to be characteristic of mice that engaged in stereotypies (e.g., bar mouthing, twirling, jumping). Garner et al. (2011) interpreted these differences as evidence that barbering reflects a form of goal-driven, flexible behaviour directed toward an inappropriately repeated goal (i.e., it is *compulsive*), which is distinct from non-functional, unvarying repetitive motor patterns (i.e., stereotypies), further bolstering support for spontaneous barbering in mice as a potentially valid model of TTM. This is a key advantage over earlier ethological models that did not make the distinction between animal behaviours that are stereotypical versus compulsive (e.g., Bordnick, Thyer, & Ritchie, 1994; Swedo, 1989; Swedo & Rapoport, 1991).

The possibility of a valid animal model for TTM facilitates exciting opportunities for advancing our understanding of the developmental and neurobiological mechanisms underlying TTM. Unfortunately, this research is largely yet to occur, with mechanistic explanations of barbering in mice amounting to indirect evidence of "dysfunction in the dorsolateral prefrontal cortico-striatal loops" of the basal ganglia (Dufour & Garner, 2010, p. 216). The factors that exacerbate barbering are summarised as social stress, boredom resulting from a lack of environmental complexity or novelty, and reproductive hormonal fluctuation (Dufour & Garner, 2010;

Garner et al., 2004). Moreover, barbering has never been observed in wild mice (Reinhardt, 2005), and as such, all evidence derived from mouse models are within the context of laboratory environments. It therefore remains to be determined whether barbering is the result of predisposing "pathological disinhibition of behavioural control induced by an abnormal environment, or merely the extremes of normal function expressed in an abnormal environment" (Garner et al., 2011, p. 195).

Finally, as per the limitations of all animal models of human psychopathology, the cognitive, affective, and motivational factors that influence maladaptive behaviour – factors that are critical to the phenomenology of impulsivity and compulsivity (see section 3.3; Hollander & Wong, 1995) – can only be inferred from animals' observed behaviour. As Abramowitz, Taylor, McKay, and Deacon (2011) explained, the *psychological* factors that distinguish compulsive or impulsive behaviours from stereotypical movements in animals are ambiguous because they cannot be observed. As such, findings that suggest set-shifting deficits indicate "compulsivity" or "impulsivity" in barbering mice, while response inhibition deficits indicate stereotypy (Garner, 2006; Garner et al., 2011), are not so straightforward when examined in neuropsychological studies of genuine TTM, as will be discussed in section 3.4.4.

3.4.3 Neuroimaging studies. Neuroimaging studies in TTM have utilised both structural and functional imaging technologies. The findings are inconsistent, which is likely a result of (1) limited statistical power due to small sample sizes, (2) varying degrees of control for psychiatric comorbidities and treatment status within and across samples, and (3) a reliance upon region-of-interest (i.e., *a-priori*) analyses based upon imaging findings of putatively related impulsive-compulsive disorders (for reviews, see Chamberlain et al., 2009; Johnson & El-Alfy, 2015; Singisetti, Camberlain, & Fineberg, 2010).

Compared to OCD and HC participants, studies using magnetic resonance imaging (MRI) have reported an absence of abnormalities in caudate volume (Stein, Coetzer, Lee, Davids, & Bouwer, 1997), but reduced volume of the left inferior frontal gyrus (Grachev, 1997); left putamen (Grachev, 1997; O'Sullivan et al., 1997) and cerebellum (Keuthen, Makris, et al., 2007); and increased volume of the right cuneal cortex (Grachev, 1997). The only whole-brain MRI study (and which did not rely upon *a-priori* analyses) compared 18 participants with TTM to 19 HC participants, and somewhat by contrast, reported significantly increased grey matter density in the left caudate and left putamen (Chamberlain et al., 2008). Additionally, there was increased grey matter density in the left amygdalo-hippocampal formation, bilateral cingulate, and right frontal cortex. These cortico-striatal abnormalities are implicated in emotion processing and modulation (including linking behavioural outcomes to motivation/reinforcement), coordinating and inhibiting motor sequences, and habit learning (Chamberlain et al., 2008; Gracev, 1997; Keuthen, Makris, et al., 2007).

The most recent structural imaging study did not replicate findings of reduced inferior frontal gyri, striatal or cerebellar volumes (Odlaug, Chamberlain, Derbyshire, Leppink, & Grant, 2014). However, TTM participants (n = 12) and their unaffected first-degree relatives (n = 10) did show evidence of excess cortical thickness in frontal gyri, precuneus, temporal cortex, and associated focal regions as compared to HC participants (n = 14). These regions are implicated in inhibitory control, emotional processing, and awareness (Odlaug et al., 2014). Chamberlain et al. (2010) found significantly greater white matter disconnectivity in the orbitofrontal cortex, anterior cingulate cortices, left pre-supplementary motor area and the left temporal lobe among TTM participants (n = 18) compared to HCs (n = 19). Roos, Fouche, Stein, and Lochner (2013) did not replicate these group differences, however, they did find that TTM

symptom duration and severity was associated with increased mean diffusity (i.e., conduction) in cortico-striatal-thalamo white matter pathways. Cortico-striatal-thalamo-cortical (CSTC) pathways are strongly implicated in both OCD (Pauls, Abramovitch, Rauch, & Geller, 2014) and TS (Felling & Singer, 2011; Singer & Minzer, 2003). The CSTC model suggests that there is a lower threshold for activation in these feedback loops, such that excessive activity in the orbitofrontal-subcortical pathway is poorly inhibited; in OCD, this is believed to direct excessive attention toward perceived threatening stimuli, with corresponding poorly inhibited compulsions to neutralise the threat (Pauls et al., 2014). While TTM appears to share abnormalities in the brain regions and white matter tracts implicating CSTC neurocircuitry, it remains unclear how these feedback loops differ from that of OCD in particular, given that hairpulling episodes in TTM are typically not preceded by obsessions (Stanley & Cohen, 1999).

The limited number of functional brain imaging studies has extended structural imaging findings albeit with some inconsistencies. Significant glucose hypermetabolism in bilateral cerebellar and the right parietal cortex was reported using positron emission topography (PET) in 10 TTM participants compared to 20 HCs (Swedo et al., 1991). Following 12 weeks of treatment with citalopram (an SSRI), functional magnetic resonance imaging (fMRI) revealed significant pre- to post-treatment reductions in activity in the right anterior-temporal area, left putamen, and bilateral inferior-posterior frontal lobe areas among 10 TTM participants (Stein et al., 2002). Although supporting previous findings implicating cortico-striatal regions in TTM (e.g., Chamberlain et al., 2008; Grachev, 1997; O'Sullivan et al., 1997), the authors did not correct for multiple comparisons, and no measure of TTM severity was utilised to determine if symptoms improved following treatment (as occurred when barbering mice were treated with SSRIs; Welch et al., 2007). Rauch et al. (2007) found no differences between TTM (n =

10) and HC participants (*n* = 10) in striatal or hippocampal activation during an implicit sequence learning task, which may have resulted from inadequate task sensitivity and/or low statistical power. By contrast, Lee et al. (2010), using whole-brain fMRI, found significantly greater activation in the left temporal cortex and putamen among children with TTM (*n* = 9) compared to healthy children (*n* = 10) in response to visual symptom-provocation. They also found significant activation in the precuneus and dorsal posterior cingulate gyrus in response to combined visual-tactile symptom provocation. Although uncorrected for multiple analyses, these findings converge with structural evidence for the role of cortico-striatal pathways in TTM.

Finally, following evidence that TTM responds to dopaminergic and glutamatergic agents implicated in reward processing and addiction (e.g., olanzapine, N-acetylcysteine; Rothbart et al., 2013), White et al. (2013) used fMRI to assess activation of the nucleus accumbens (NAcc), a region implicated in reward prediction and feedback in response to a monetary-based reward-anticipation task, and during resting state. Participants were 13 non-medicated adults with TTM and 12 HCs, matched for age and gender. White et al. reported significantly lower activation in the NAcc in response to anticipated monetary reward, and significantly greater activation in the same area in response to both reward and loss outcome conditions among TTM participants. Similar relationships have been reported in substance addiction, ADHD, and OCD (for a summary, see White et al., 2013). In TTM, White et al. suggested these findings may reflect a reward network that has become desensitised or alternatively is "pathologically stimulated by the behavioral outcome, regardless of valence" (p. 1268). Greater activation corresponding to loss outcome was interpreted to reflect under-represented negative consequences of hairpulling (White et al., 2013). As these findings are preliminary, further research is required to test these interpretations. White et al. also

reported reduced resting state connectivity between the NAcc and dorsal anterior cingulate, basolateral amygdala, temporal regions, and orbitofrontal cortex. These findings support previous research that has found abnormalities to cortico-striatal-thalamic regions in TTM (e.g., Chamberlain et al., 2008, 2010; Lee et al., 2010; Odlaug et al., 2014; Stein et al., 2002), but suggest that the connectivity of these regions may be more specifically in relation to reward prediction, motivation, and behavioural reinforcement networks (e.g., the NAcc).

Given evidence that certain OCD symptom clusters have unique neuropsychological profiles and may therefore have unique underlying neural bases (Leopold & Backenstrass, 2015), and further, that addiction- versus OCD-like subtypes of TTM have been postulated (e.g., Christenson, et al., 1993; Grant et al., 2007), it may be possible that some of the inconsistent neuroimaging findings in TTM stem from its heterogeneity. White et al. (2013) proposed that individuals who primarily engage in focused hairpulling may be characterised by disrupted reward processing in the ventral striatum (i.e., reflecting a more addictive phenotype) whereas individuals who pull in a more automatic style may be characterised by disrupted dorsal striatal circuitry (i.e., a habitual/compulsive subtype). As will be discussed in section 3.4.4, there is preliminary neuropsychological evidence to suggest that some groups of individuals may be categorised as having an impulsive form of TTM and others a compulsive form of TTM (e.g., Bohne et al., 2008). However, as previously discussed, it is also possible that several more TTM subtypes exist, each characterised by differing contributions of compulsive-impulsive mechanisms (Flessner et al., 2012; Grant, 2015; see section 3.3). Additionally, it will be necessary that future research evaluates the influence of comorbid depressive symptoms and pharmacological treatment status as possible

moderators (or confounders) of imaging findings; this remains a significant limitation in the TTM neuroimaging research conducted to date.

3.4.4 Neuropsychological studies. Neuropsychological studies in TTM have reported limited and somewhat contrasting findings in relation to executive (i.e., attention, planning), visuospatial, and memory functioning (Coetzer & Stein, 1999; Keuthen et al., 1996; Martin et al., 1993; Rettew, Cheslow, Rapoport, Leonard, & Lenane, 1991; Stanley, Hannay, & Breckenridge, 1997). Recent neuropsychological investigation in TTM has, as a result, turned its focus to two main cognitive functions, which will be the focus of discussion here; cognitive set-shifting ability and motor response inhibition.

As noted in section 3.4.2, cognitive set-shifting deficits have been regarded as the hallmark of compulsivity in animal models of TTM (Garner, 2006; Garner et al., 2011). It has also been proposed as a candidate endophenotype of OCD (Chamberlain, Fineberg, Menzies, et al., 2007). As such, set-shifting has received strong attention in TTM neuropsychological studies, as has motor response inhibition. Set-shifting is the ability to switch one's attention between sets of stimuli in response to changing rules or goals. In TTM research, set-shifting has been assessed with the intra-dimensional/extra-dimensional set-shift task (IDED; Owen, Roberts, Polkey, Sahakian, & Robbins, 1991). The ID phase examines generalisation of rules in response to novel stimuli while the ED phase examines the ability to shift attention away from previously relevant stimuli (Chamberlain, Fineberg, Blackwell, Robbins, & Sahakian, 2006). Deficits in the ED phase are therefore indicative of perseveration (i.e., cognitive inflexibility). Chamberlain et al. (2006) found that OCD participants (n = 20) required significantly more trials during the ED phase than did TTM (n = 17) or HC participants (n = 20). TTM and HC participants did not differ on task performance, leading Chamberlain et al.

(2006) to conclude that cognitive flexibility deficits are limited to OCD. To date, this remains the only study to have directly compared TTM and OCD participants on set-shifting ability, and as such, this may have been a premature conclusion. For instance, Odlaug, Chamberlain, Harvanko, and Grant (2012) found that participants with early-onset TTM (i.e., age ≤ 11 years, n = 19) did have significantly impaired ED set-shifting compared to HC participants (n = 27), but set-shifting ability remained intact among participants who reported late-onset TTM (i.e., age ≥12 years, n = 25). As TTM onset was retrospectively self-reported, this finding requires investigation in paediatric TTM samples.

Most recently, Francazio and Flessner (2015) compared 28 college students who reported obsessive-compulsive behaviour according to a composite score combining self-report symptom measures of TTM, SPD, and OCD. Compared to 28 matched HC students, the symptom group experienced significantly greater ED set-shifting errors. Controlling for anxiety, they also found that this was not predictive of symptom severity, just as Grant, Leppink and Chamberlain (2015) failed to find a relationship between perceived stress levels and cognitive inflexibility among 140 participants with TTM or SPD. Should set-shifting deficits be a neuropsychological feature of at least a subgroup of individuals with TTM (e.g., Odlaug et al., 2012), this could suggest it is a vulnerability factor as it is not state-dependent (Grant et al., 2015). However, substantially more research is required to determine if cognitive inflexibility is indeed associated with TTM; particularly in light of a recent review having concluded that "the majority of studies indicat[e] no deficient performance on set shifting tasks in OCD samples" (Abramovitch & Cooperman, 2015, p. 26).

Impaired response inhibition is a form of motoric impulsivity, which is assessed by go/no-go and stop-signal tasks that require the individual to suppress (i.e., inhibit)

pre-potent motor sequences in response to competing presentations of stimuli (Chamberlain et al., 2006). Unlike in the set-shifting literature, studies to date have repeatedly found that response inhibition is significantly more impaired in TTM than in HC participants (Bohne et al., 2008; Chamberlain et al., 2006; Odlaug et al., 2013; Odlaug et al., 2014) although two studies have not found this (Chamberlain, Fineberg, Blackwell, et al., 2007; Grant, Odlaug, & Chamberlain, 2011). Using an affective go/no-go task, another study found no differences in this form of response inhibition between OCD (n = 20) and TTM (n = 20) participants besides OCD participants making significantly greater omission errors in response to negatively-valanced (sad) target words (Chamberlain, Fineberg, Blackwell, et al., 2007). Moreover, this study did not find any differences between TTM, OCD, and HC participants on decision-making impulsivity assessed by the Cambridge gamble task. There were also no differences between TTM, OCD and HC participants in terms of their information sampling behaviour, a form of reflection impulsivity (Chamberlain, Fineberg, Blackwell, et al., 2007).

Motor response inhibition deficits are likely to represent shared neuropsychological mechanisms underlying TTM and OCD; however, further research is required to delineate the subtle differences in how these deficits manifest in each disorder according to moderating factors (Chamberlain et al., 2006; Grant et al., 2011; Odlaug et al., 2013). Some of the incongruent findings pertaining to the role of response inhibition in TTM and clinical comparison groups have been hypothesised to result from the heterogeneous nature of TTM. For instance, using the go/no-go task, Bohne et al. (2008) found no significant differences in motor inhibition deficits between TTM (n = 25) and OCD (n = 21) participants. However, they did notice that TTM participants' performance ranged on a continuum from fast and inaccurate (i.e., impulsive) to slow

and accurate (i.e., cautious), whereas OCD participants' performance ranged from slow and inaccurate (i.e., task incompetent) to fast and accurate (i.e., task competent). Using a median split to create impulsive and cautious groups of TTM participants, the impulsive group (n = 9) reported a significantly earlier age of disorder onset than the cautious group (n = 9). Similarly, research has since found that individuals with later-onset TTM demonstrated significantly more impaired stop-signal inhibitory control compared to HCs; a difference that was not found for participants with earlier-onset TTM (Odlaug et al., 2012). Although alternative methods of creating TTM subgroups (i.e., self-report of primarily pleasure-driven versus relief-driven hairpulling) have failed to uncover similar group differences on response inhibition and select clinical characteristics (e.g., Odlaug et al., 2013), the preliminary findings of Bohne et al. (2008) and Odlaug et al. (2012) have alluded to the existence of discrete TTM phenotypes with unique clinical and neuropsychological profiles. More research is required to define and validate such phenotypes.

On the whole, impaired response inhibition has been the most consistently identified neuropsychological deficit in TTM, which is congruent with participants' subjective descriptions of hairpulling as being difficult to control (e.g., Casati et al., 2000). While also consistent with neuroimaging findings that suggest abnormal top-down control of motor inhibition (i.e., cortico-striatal dysfunction), it remains that response inhibition and cortico-striatal dysfunction are not specific to TTM, as these findings have also been reported for a range of compulsive-impulsive disorders including OCD, TS, and ADHD (for reviews, see Eddy, Rizzo, & Cavanna, 2009; Hervey, Epstein, & Curry, 2004; Pauls et al., 2014). Additionally, while there is preliminary evidence to suggest that response inhibition deficits in a combined TTM and SPD sample are not state-dependent (i.e., did not correspond to varying levels of

perceived stress; Grant et al., 2015), much more research is required to determine if response inhibition may be a trait-like vulnerability factor. Studies using paediatric TTM samples, longitudinal designs, and comparisons with unaffected first-degree relatives (e.g., to identify possible endophenotypic markers) will be valuable. Research along these lines has recently commenced in relation to tic disorders and BFRBs, whereby Morand-Beualieu et al. (2016) discovered that CBT specifically developed for these behaviours significantly improved participants' symptom severity, and corresponded with pre- to post-treatment changes to brain functioning in regions associated with cognitive set-shifting ability and working memory. Such studies in TTM will undoubtedly advance our understanding of the neurobiological mechanisms implicated in its onset and maintenance, and guide evidence-based treatment development..

3.5 Behavioural Models

Behavioural theory purports that all human behaviour – adaptive and maladaptive – is the result of learned stimulus-response associations (Watson, 1913). Two core behavioural learning processes have been delineated; classical and operant conditioning (for a review, see Hawton, Salkovskis, Kirk, & Clark, 1989). Both of these processes have been implicated in behavioural models of TTM. Although not strictly aetiological in emphasis, behavioural models of TTM provide an important context for understanding how the psychobiological mechanisms reviewed in the previous section are expressed in observable TTM symptoms and behavioural patterns. As such, an understanding of the behavioural factors that contribute to TTM maintenance has not only suggested other potential aetiological mechanisms (Diefenbach, Reitman, & Williamson, 2000), but has also been highly influential in the development of behavioural therapies for TTM; particularly, habit reversal therapy, which is currently

considered its first-line treatment (Franklin, Zagrabbe, & Benavides, 2011; Grant & Chamberlain, 2015).

3.5.1 Habit models. The first behavioural model of TTM onset and maintenance was derived from its conceptualisation as a "nervous habit" akin to nail-biting, and a range of stereotypic behaviours and tics (Azrin & Nunn, 1973; Azrin, Nunn, & Frantz, 1980). Azrin and Nunn suggested that nervous habits, including hairpulling, begin as normal but infrequent behaviours that may be precipitated and/or exacerbated by physical injury or psychological trauma (although such events were not considered necessary conditions of onset). Persistence of the habit was believed to occur as a result of the behaviour becoming "blended into normal movements" and through this process, hairpulling eluded both personal and social awareness (Azrin & Nunn, 1973, p. 620). Over time, the habit becomes automatically performed and reinforced through a combination of social reinforcement (positive or negative) and strengthening of the muscles used to perform the habit (Azrin & Nunn, 1973).

The habit model and its associated treatment, habit reversal therapy, has been criticised for its emphasis on the automaticity of hairpulling behaviour as opposed to a consideration of its function (Himle, Flessner, & Woods, 2004). Although Azrin and colleagues (Azrin et al., 1980; Azrin & Nunn, 1973) described behaviours like hairpulling as nervous habits, their model surprisingly provides little explanation for the assumed anxiety and/or tension reduction function that habits serve. College students have been observed to engage in significantly more hair and face manipulation during an anxiety-provoking condition compared to a neutral condition (Woods & Miltenberger, 1996), which implies that such habits serve an anxiety-reducing function. Functional analysis is a systematic method of assessment aimed at identifying "the environmental determinants (i.e., reinforcing functions)" of a wide variety of

maladaptive behaviours (Neef & Iwata, 1994, p. 211). Using alternating experimental conditions over a period of 10 days, one study utilised functional analysis procedures to identify hairpulling cues and reinforcing stimuli for an adult with an intellectual disability and a six year old child of normal intelligence, both of whom were female (Miltenberger, Long, Rapp, Lumley, & Elliott, 1998). Experimental conditions included social disapproval, demand (relating to a challenging task), being alone, and a control condition. Contrary to early speculation that social reinforcement may be a key maintaining factor (Azrin et al., 1973), the highest levels of observed hairpulling and hair manipulation occurred during the alone condition for each participant. Miltenberger et al. (1998) concluded that hairpulling functions to provide automatic positive reinforcement via sensory stimulation (i.e., it is a self-stimulatory behaviour) as opposed to serving the purpose of negative reinforcement via tension/anxiety reduction.

While the sensory stimulating function of hairpulling indeed appears to play an important maintaining function (see also Rapp, Miltenberger, Galensky, Ellingson, & Long, 1999), this does not exclude the possibility that sensory stimulation itself serves the purpose of reducing unpleasant internal states (i.e., as a modulator; see section 3.6). Notwithstanding the significant limitation that the aforementioned studies included a total of three participants whose hairpulling behaviours may have been more characteristic of stereotypy as opposed to TTM (Miltenberger et al., 1998; Rapp et al., 1999), it is also possible that participants may have found the absence of stimulation in the alone condition to itself be a source of tension, anxiety or distress. Preliminary evidence for this is now emerging as framed within the frustrated action model (Roberts, O'Connor, Aardema, & Bélanger, 2015). This will be discussed further in section 3.6.2, but briefly, the frustrated action model proposes that individuals with BFRBs such as hairpulling, skin-picking, and nail-biting have difficulty regulating

emotions that arise from negative perceptions of inactivity (Roberts et al., 2015); appraisals that may plausibly be experienced when one is alone in a room without a purposeful task to focus upon.

The possibility that habitual hairpulling is not necessarily automatically reinforced via sensory stimulation (e.g., Miltenberger et al., 1998), but could be reinforced via cognitive appraisals of inactivity and the emotions associated with those appraisals (e.g., frustration; Roberts et al., 2015) raises a core limitation to the habit model; it is concerned only with observable behaviour-stimuli relationships. From this perspective, it make sense that researchers (e.g., Flessner, Woods, et al., 2008) have suggested that habit reversal therapy may be most suited to treating the automatic hairpulling style of TTM, especially given assumptions that automatically reinforced behaviours ought be treated via "elimination or attenuation of sensory stimulation derived from the response" (Iwata, Dorsey, Slifer, Bauman, & Richman, 1994, p. 206). Indeed, this is targeted by two of the three major components of contemporary habit reversal therapy for TTM; stimulus control and competing response practice (Franklin et al., 2011; Morris, Zickgraf, Dingfelder, & Franklin, 2013). However, given emerging evidence that BFRBs are influenced by a complex interaction of unobservable factors such as emotion, cognition, and personality traits (O'Connor et al., 2015; Roberts et al., 2013, 2015), it appears that automatic sensory reinforcement is an insufficient explanation of how maladaptive hairpulling behaviour is maintained. This leads to the second major limitation of the habit model as applied to TTM; this model may be more accurately described as a model of *hairpulling behaviour* (i.e., a BFRB) rather than a model of TTM, a multidimensional and complex psychological disorder.

3.5.2 Comprehensive behavioural model. The comprehensive behavioural (ComB) model was developed by Mansueto and colleagues (Mansueto et al., 1997,

1999; Stemberger et al., 2003) to extend the habit model, and to specifically account for the complex array of factors contributing to TTM as a multifaceted disorder. Five main factors are considered to play a role as antecedent, maintaining, and consequential variables: (1) environmental/situational, (2) emotional, (3) cognitive, (4) sensory, and (5) behavioural/motoric. These variables are considered to influence hairpulling urges and behaviour via classical and operant conditioning, and operate idiosyncratically for each individual. For this reason, the ComB model emphasises the importance of a functional analysis of hairpulling behaviour such that clinicians can generate testable hypotheses about the factors that contribute to an individual's TTM symptoms, and apply individually-tailored treatments as opposed to a "hodgepodge of strategies available from standard cognitive behavioural therapy" (Stemberger et al., 2003, p. 344). This section will summarise the ComB model, review evidence in support of the model, and suggest areas in which the model still requires empirical evaluation. The role of cognitions in hairpulling episodes as purported within the ComB model will be particularly emphasised, as per the central focus of this thesis.

According to the ComB model, hairpulling behaviour initially arises from classically conditioned relationships between the urge to pull and conditioned stimuli. Expanding the example provided by Mansueto et al. (1997), this suggests that hairpulling urges (the unconditioned stimulus) elicit actual hairpulling behaviour (the unconditioned response), which then becomes associated with implicated stimuli such as tweezers, mirrors, and other objects/settings (neutral stimuli). Via repeated stimuli-urge pairings, neutral stimuli become conditioned stimuli such that their sight or presence alone cues hairpulling urges and behaviour. As Mansueto et al. (1997) acknowledged and research has since evidence, however, not all hairpulling episodes are triggered by urges (Woods, Flessner, et al., 2006). Whether a different behavioural

learning process applies to hairpulling that occurs in the absence of a specific urge has not been entertained within this model, but may nevertheless arise from conditioning processes.

The example above refers to *external* conditioned stimuli (situational/environmental) as hairpulling cues, but the ComB model also emphasises the importance of *internal* conditioned stimuli (cognitive-affective-sensory-behavioural/motoric). Prior to the commencement of a hairpulling episode, participants across several studies have consistently reported experiencing negative affect such as boredom, sadness, anger, frustration, anxiety, guilt, and tension (Diefenbach, Mouton-Odum, & Stanley, 2002; Diefenbach, Tolin, Meunier, & Worhunsky, 2008; Duke et al., 2009; Duke, Keeley, Ricketts, et al., 2010; Ghisi et al., 2013). As such, these emotions may be considered antecedent hairpulling cues. Phenomenological studies and anecdotal evidence suggests that the sight or touch of certain hair qualities can also elicit hairpulling; for instance, hair that feels coarse is a commonly endorsed hairpulling cue (Duke et al., 2009; Duke, Keeley, Ricketts, et al., 2010; Mansueto et al., 1997; Stemberger et al., 2003). The ComB model also recognises that cognitions play a role as hairpulling cues, particularly those that are tied to the sensory qualities of hairs or a desire for symmetry. Example cognitions provided by Mansueto et al. (1997, p. 571) included “my eyelashes are crooked and they need to be straight” and “these gray hairs have to go”. Similarly, Duke and colleagues reported that “doesn’t feel right” and “doesn’t look right” were among the most frequently endorsed cognitions associated with hairpulling in non-clinical samples (Duke et al., 2009, p. 1122; Duke, Keeley, Ricketts, et al., 2010, p. 287).

However, Mansueto et al. (1997) suggested that “thoughts and beliefs do not seem to play a significant role in hair pulling for the majority of patients” (p. 571). The

authors postulated that cognitive cues may be more relevant for individuals (a) whose TTM symptoms are comorbid with obsessive-compulsive or depressive symptomatology (and are therefore permeated by tendencies towards perfectionism and/or desire for symmetry), and (b) who primarily engage in focused hairpulling. To date, the only research providing support for these hypotheses has been conducted in a small college student sample; Duke, Keeley, Ricketts, et al. (2010) found that the cognition "doesn't look right" was significantly more frequently endorsed by self-reported focused hairpullers (n = 9) than by automatic hairpullers (n = 7). Additionally, focused hairpullers endorsed significantly greater symptoms of depression than did automatic hairpullers; however, OCD symptoms were not assessed. Should these sensory-cognitive cues be the main form of cognitions eliciting hairpulling episodes (even if just for a subgroup of individuals with TTM who have comorbid depression and/or OCD), it remains unknown what underlying beliefs may be driving a desire for hair to "look right" in the first instance.

Once classically conditioned cues elicit hairpulling urges/behaviour, the ComB model applies operant conditioning principles to explain how the behaviour is either facilitated (i.e., the hairpulling episode commences and continues) or is inhibited (i.e., the hairpulling episode is prevented or terminated). Again, facilitative and inhibitory factors may be external or internal. Mansueto et al. (1997) provided the example of the availability of implements like tweezers and mirrors as facilitative factors, while the presence of another person can act to inhibit hairpulling. As previously discussed, limited experimental evidence supports that hairpulling is more likely to occur when individuals are alone (Miltenberger et al., 1998; Rapp et al., 1999).

Interestingly, the ComB model appears to emphasise the facilitative role of cognitions despite suggesting that thoughts and beliefs generally play a limited role for

the majority of individuals with TTM. Mansueto et al. (1997, 1999) suggested that cognitions such as “I deserve this” and “I’ll just pull one” are similar to the facilitative thoughts experienced by individuals with addictive disorders – a comparison that Gluhoski (1995) drew upon in a cognitive model of TTM (to be discussed in section 3.7). Manseuto et al. (1997) did not stipulate that such thoughts may be more commonly experienced by individuals whose TTM symptoms are particularly characterised by addictive/impulsive symptomatology, a hypothesised subtype of TTM that has since been proposed by Grant et al. (2007). The model also suggests that cognitions can act as inhibitory factors in the form of thoughts about the negative risks or consequences of engaging in hairpulling. Despite there being some CBT protocols for TTM that utilise thought-stopping and guided self-dialogue methods (e.g., Rothbaum, 1992), and which align with Mansueto and colleague’s (1997, 1999; Stemberger et al., 2003) proposal that cognitions can act to inhibit hairpulling, it remains unknown how effective cognitive strategies alone might be in preventing or ceasing hairpulling episodes.

Before, during, and after a hairpulling episode, various rituals can accompany hairpulling behaviours, which in and of themselves may be reinforcing or lead to reinforcing consequences. This can include: hair twirling and visual/tactile selection of target hairs for removal; manipulation of removed hair strands orally or with the fingers; visual examination of the hair strand/root; self-stimulatory behaviours such as stroking the face and lips with hair strands; and rituals for discarding hair. Such behaviours can produce pleasurable tactile sensations (Miltenberger et al., 1998; Rapp et al., 1999), reduce unpleasant sensations like irritation or itching (Christenson, Mackenzie, et al., 1991), distract from unpleasant thoughts or emotions, and may also facilitate procrastination or the avoidance of tasks (Mansueto et al., 1997, 1999; Stemberger et

al., 2003). Essentially, these behaviours can be positively reinforcing by producing a reward or negatively reinforcing by removing something aversive.

The strongest support for this aspect of the ComB model comes from investigating the fluctuation of affective experience across the hairpulling cycle. Retrospective self-reports and emerging experimental research has shown that many of the emotions reported prior to hairpulling episodes (e.g., boredom, anger, tension, anxiety) reduce during and after a hairpulling episode (Diefenbach et al., 2002, 2008; Duke et al., 2009; Duke, Keeley, Ricketts, et al., 2010; Ghisi et al., 2013; Roberts et al., 2015). Additionally, feelings of relief, happiness, and calmness have been reported to increase during and after a hairpulling episode (Diefenbach et al., 2002, 2008). These findings suggest that both negative and positive emotional reinforcement act to maintain TTM symptoms. However, upon completion of a hairpulling episode, guilt, sadness, and anger have also been found to increase to pre-hairpulling levels or even higher (Diefenbach et al., 2002, 2008; Ghisi et al., 2013). These negative consequences, among others (e.g., pain, bleeding, fatigue) are believed to have a punishing effect that can end a hairpulling episode (Mansueto et al., 1997, 1999; Stemberger et al., 2003).

The evidence for cognitions as reinforcing factors is limited. Mansueto et al. (1999) explained that thoughts related to achieving a hairpulling-related goal might be positively reinforcing. For instance, if one's goal was to achieve a sense of symmetry, the reinforcing cognition might be "now my eyelashes are symmetrical" (Mansueto et al., 1999, p. 30). Beyond goal-achievement, the ComB model provides no further speculation as to why such a thought might be positively reinforcing; arguably, it may be related to any number of deeply held beliefs, such as a supporting a sense of mastery or self-efficacy, affirming a desire to feel physically attractive or affirming perfectionistic standards. In terms of negative reinforcement, hairpulling for the

purposes of distracting from, avoiding or reducing unpleasant internal experiences, including thoughts, is consistent with the construct of experiential avoidance (Hayes et al, 1996). Among 404 internet-surveyed participants with self-reported TTM, experiential avoidance was found to mediate the relationships between TTM severity and shame, fear of negative evaluation, and dysfunctional beliefs about appearance (Norberg, Wetterneck, Woods, & Conelea, 2007). The authors suggested that TTM treatment may be optimised by directly targeting an individual's "experientially avoidant repertoire" (Norberg et al., 2007, p. 378). This leads to another plausible interpretation of the evidence used to support the ComB model; that cognitive-affective factors contributing to TTM stem not solely from learned associations, but from a trait-like "general deficit in emotion regulation that promotes the adoption of maladaptive coping methods" (Roberts et al., 2013, p. 750). This will be further discussed in section 3.6.2.

Finally, the ComB model suggests that external and internal reinforcing factors are not always experienced as reinforcing each time hairpulling occurs (Mansueto et al., 1997). As mentioned, there can be punishing consequences of hairpulling that may terminate a hairpulling episode (e.g., pain, fatigue), particularly in the presence of inhibitory factors (e.g., a scheduled activity needing to take place). As hairpulling does not always lead to reinforcement, Mansueto et al. (1997) proposed that an intermittent reinforcement pattern develops, which contributes to the maintenance and chronicity of TTM. Intermittent reinforcement schedules and relatedly, delay discounting (a preference for small, immediate rewards over delayed but larger rewards), are considered key maintaining factors in behavioural addictions such as gambling disorder (Johansson, Grant, Won Kim, Odlaug, & Götestam, 2009; Sharpe, 2002; Reynolds, 2006). Using the Monetary Choice Questionnaire, Himle et al. (2004) reported

unpublished preliminary data that indicated similar levels of delay discounting among individuals with TTM compared with levels reported in heroin-addicted samples. Whether monetary-based reward processes can be generalised to explain hairpulling-related reward processes requires further examination, as does the contribution of reinforcement schedules and related behavioural learning processes to TTM.

A major limitation of the ComB model is that many of its claims regarding the learning-based mechanisms of action in eliciting and maintaining TTM symptoms remain to be tested using experimental or observational paradigms (Himle et al., 2004), and evaluation of the model as a standardised treatment protocol is only now emerging (Falkenstein, Ruben, & Haaga, 2015). Although a range of internal and external cues and reinforcers have been proposed, as reviewed, the majority of evidence overwhelmingly utilises self-report, cross-sectional methodologies in relation to affective cues. Anecdotally, sensory cues and reinforcers are critical to TTM, yet no research has investigated sensory phenomena, perceptual processes or their physiological bases in a way that is analogous to other OC spectrum disorders (e.g., Belluscio, Jin, Watters, Lee, & Hallett, 2011; Ferrão et al., 2012; Kaplan, Enticott, Hohwy, Castle, & Rossell, 2014; Jackson, Parkinson, Young Kim, Schüermann, & Eickhoff, 2011). Such research is important because just as affective cues may not simply operate via behavioural learning processes (i.e., they may also reflect an underlying predisposition to emotion dysregulation; Roberts et al., 2013), the same may be proposed for why sensory cues elicit hairpulling behaviour (i.e., as a reflection of an underlying predisposition to states of stimulus dysregulation; Penzel, 2003).

3.6 Regulatory Models

3.6.1 Stimulus regulation model. The stimulus regulation model proposed by Penzel (2003) suggests that individuals who develop TTM are predisposed to experiencing "internal state[s] of sensory imbalance" (p. 69). This sensory imbalance can include over-stimulation such as that arising from stress, anxiety, excitement and other affective states, and under-stimulation such as that arising from boredom or physical inactivity (Penzel, 2003). Although not explicitly stated, such affective states and situations presumably elicit physiological states that individuals with TTM may find difficult to tolerate (e.g., increased heart rate corresponding with anxiety), and presumably also includes sensory cues as described in the ComB model (e.g., itching, tingling, etc.; Mansueto et al., 1997). As such, rather than physiological/sensory cues acting strictly as conditioned stimuli that elicit hairpulling episodes according to behavioural learning principles, the stimulus regulation model suggests that (a) individuals with TTM may have a more sensitive threshold for tolerating physiological and sensory stimulation, and (b) hairpulling acts as an external method of regulating over- and under-stimulation to restore nervous system homeostasis (Penzel, 2003).

For states of over-stimulation, Penzel (2003) suggests that hairpulling may serve to intensify the sensory stimulation such that it becomes distracting and induces a trance-like state. Indeed, high levels of dissociation have been reported for some individuals with TTM (Lochner et al., 2004; Lochner, Simeon, et al., 2002). For under-stimulation, hairpulling and associated behaviours provide immediate tactile, visual, and oral stimulation that can be experienced as pleasurable. This interpretation might also be applied to explain why hairpulling frequently occurs when individuals are alone (e.g., Miltenberger et al., 1998; Rapp et al., 1999). Rather than hairpulling being an automatically reinforced behaviour (Miltenberger et al. 1998), the stimulus regulation

model would suggest that, when alone, individuals with TTM utilise hairpulling to regulate their predisposed sensitivity to a lack of environmental stimulation. In a variety of animals, environmental deprivation and social isolation have been associated with increased hair plucking (Dufour & Garner, 2010). However, the direction of the relationships between deprivation/isolation, stimulus regulation, and hairpulling remains to be determined in animal models; an issue that also remains to be resolved in the stimulus regulation model of (human) TTM.

Penzel (2003) describes the stimulus regulation model as an integrated approach to understanding the causes of TTM. The model was predominantly drawn from his clinical experiences treating TTM, BFRBs, and stereotypies associated with autism spectrum disorders (Penzel, 2003; personal communication, April 24, 2015). For a causal model, however, the biological mechanisms accounting for how individuals with TTM are predisposed to experiencing sensory imbalance is non-specific; Penzel suggests that genetics implicated in serotonin and "sometimes" dopamine neurotransmission are likely to be responsible (Penzel, 2003, p. 69). Furthermore, this is believed to be within the context of an adapted version of Swedo and colleague's ethological model of TTM (Swedo, 1989; Swedo & Rapoport, 1991). Rather than fixed-action grooming patterns being inappropriately released by environmental stimuli (Swedo & Rapoport, 1991), Penzel suggests that individuals with TTM simply use the hair that is readily available to them to achieve regulation of physiological states that innate grooming patterns adaptively serve to regulate anyway (e.g., body temperature, arousal, etc.; Moon-Fanelli et al.,1999). Finally, the ComB model is suggested to explain how TTM symptoms become habitual and are maintained, and so the two theories (ComB and stimulus regulation model) are not mutually exclusive (Penzel, 2003).

The stimulus regulation model is intuitively appealing. However, beyond genetically-mediated dysfunction of serotonergic/dopaminergic neurotransmission contributing to stimulus dysregulation, Penzel (2003) provides no further speculation on exactly what comprises the implicated "mechanisms that are supposed to balance internal levels of stress within the nervous system" (Penzel, 2003, p. 69). Until further operationalisation of the model occurs, it will remain difficult to empirically evaluate. As a result, it remains unclear from the model as to what can be done to prevent TTM onset. A detailed cognitive-behavioural/physiological model has been proposed to account for the development and maintenance of tic behaviours as stemming, in part, from a vulnerability to sensory hypersensitivity and dysregulation (O'Connor, 2002). Given phenomenological similarities between tic disorders/TS and TTM (Ferrão et al., 2009; O'Connor et al., 2014), reference to this detailed model may provide the necessary direction for expanding and refining a testable stimulus-regulation model of TTM. As for treatment, Penzel (2003) recommends ongoing development of pharmacological agents, use of CBT, and supporting individuals to replace hairpulling with another satisfying source of stimulation (i.e., stimulus control).

3.6.2 Emotion regulation models. As reviewed by Roberts et al. (2013), research on emotions experienced across the hairpulling cycle has consistently found that boredom, anxiety, tension – and to a lesser extent, sadness and anger – are most commonly reported prior to hairpulling episodes. These emotions decrease during hairpulling episodes, while calmness, relief, and pleasure increase. After hairpulling, relief continues to be commonly reported but anger, guilt, sadness, and embarrassment also increases; often to baseline (pre-pulling) levels or higher. While the ComB model (Mansueto et al., 1997) suggests that these emotions may act as conditioned cues that can elicit and maintain TTM symptoms via negative and positive reinforcement, an

alternative explanation is that hairpulling is not strictly learned, but also independently acts as a method of emotion regulation (e.g., Diefenbach et al., 2008; Roberts et al., 2013; Shusterman, Feld, Baer, & Keuthen, 2009)

Emotion regulation is a multi-faceted and adaptive process, which involves identifying, controlling, and regulating the presence, intensity, timing, and expression of both positively- and negatively-valenced emotions (Gratz & Roemer, 2004; Gross, 1998). Part of what makes emotion regulation adaptive is that a vast array of cognitive and behavioural strategies can be flexibly utilised – with or without conscious awareness – to alter aspects of emotional experience, dependent upon the individual's goals and situational demands (Gratz & Roemer, 2004; Gross, 1998, 2002). The emotion regulation model of TTM suggests that individuals who develop TTM are (a) predisposed to experiencing emotion dysregulation, and (b) utilise hairpulling as a strategy to modulate emotional experience (Franklin & Tolin, 2007; Roberts et al., 2013; Shusterman et al., 2009; Stein, Chamberlain, & Fineberg, 2006). Each of these points will be evaluated in turn.

In support of the proposed predisposition to emotion dysregulation, individuals with TTM have high rates of comorbid mood, anxiety, alcohol/substance use, and eating disorders (e.g., Christenson, Mackenzie, et al., 1991; Schlosser et al., 1994). This could be taken as indirect evidence that individuals who develop TTM are especially prone to experiencing high levels of negative affect and/or may be more likely to utilise maladaptive strategies to modulate such affect. Compared to a non-clinical control group (n = 175), individuals with self-reported TTM symptoms (n = 1162) reported greater difficulty "snapping out" of emotions; particularly anxiety, shame, boredom and tension (Shusterman et al., 2009, p.641). There is also experimental evidence to suggest that individuals with TTM experience emotions at a greater baseline level of intensity

than do HC participants (Diefenbach et al., 2008). Finally, TTM symptom severity and urges to engage in BFRBs, including hairpulling, has been found to positively correlate with emotion dysregulation (Roberts et al., 2015; Shusterman et al., 2009), and relatedly, with alexithymia (especially difficulty identifying emotions; Rufer et al., 2014).

In terms of the mechanisms controlling a predisposition to emotion dysregulation, Stein et al. (2006) proposed that that childhood trauma and adversity among individuals with BFRBs may contribute to disrupted development of brain regions implicated in affect regulation, behavioural addiction, and cognitive control/flexibility (i.e., the A-B-C model). Stein et al. (2006) suggested that regions known to be affected by early trauma and related to emotion dysregulation, such as the amygdala, hippocampus, and dopaminergic circuits, could influence the development of BFRBs via "dopaminergic sensitization and striatal reorganization" (para. 5). Many of those regions and the possibility of desensitised reward networks have been found to be implicated in TTM (e.g., White et al., 2013; refer to section 3.4.3). However, not all individuals with TTM or BFRBs report experiencing trauma during childhood or otherwise (e.g., Boughn & Holdom, 2003; Gershuny et al., 2006; Graber & Arndt, 1993). It is therefore likely that other genetic-environmental factors contribute to the psychobiological bases of emotion dysregulation in TTM.

Turning to hairpulling as an emotion regulation strategy, many researchers have suggested that individuals with TTM use hairpulling to suppress, control or avoid negative emotion (e.g., Franklin & Tolin, 2007; Shusterman et al., 2009). Specifically, the focused style of hairpulling is believed to serve this function (Flessner, Woods et al., 2008). Applying definitions of emotion regulation as a process (e.g., Gratz & Roemer, 2004; Gross, 1998, 2002), this would imply that focused hairpulling as an emotion

regulation strategy *itself* is not necessarily maladaptive. For instance, Gross (2002) provided the example of lip-biting when angry as an emotion regulation strategy. Rather, individuals with TTM may have inflexible emotion regulation goals (i.e., a preference for emotional suppression, control or avoidance regardless of situational demands) and/or a limited cognitive-behavioural repertoire of alternative strategies for modulating emotional experience.

Experiential avoidance is the tendency to take actions (e.g., focused hairpulling) that facilitate avoidance or escape from unwanted internal experiences, including sensations, cognitions, and emotions (Hayes et al., 1996). Research has shown that TTM symptom severity is indeed associated with experiential avoidance (Begotka et al., 2004; Houghton et al., 2014; Norberg et al., 2007), and that both experiential avoidance and TTM symptoms can be reduced when this coping style is specifically targeted with treatments such as acceptance and commitment therapy (e.g., Woods, Wetterneck, et al., 2006) and dialectical behaviour therapy (e.g., Keuthen et al., 2010, 2011). Evidence suggesting that focused hairpulling is specifically utilised to facilitate experiential avoidance (as opposed to automatic hairpulling) is very limited, however. To date, only one study has found this to be the case; Houghton et al. (2014) reported that higher focused hairpulling in a treatment-seeking sample (n = 90), as measured by the MIST-A, was associated with higher levels of experiential avoidance, whereas automatic hairpulling levels were not at all correlated.

There is now robust evidence for the types of emotions hairpulling serves to regulate (e.g., Roberts et al., 2013), and growing evidence to suggest that experiential avoidance is a core goal of, and strategy for, regulating unwanted internal experiences among individuals with TTM (e.g., Begotka et al., 2004; Houghton et al., 2014). Moreover, experiential avoidance as a maladaptive emotion regulation strategy appears

to be an important change mechanism to target in TTM treatment (Keuthen et al., 2012; Woods, Wetterneck, et al., 2006). While enhanced treatment outcomes stemming from the emotion regulation model of TTM are promising (for a meta-analysis, see McGuire et al., 2014), it appears that much of this research has been performed without reference to a specific model of emotion regulation itself (e.g., Gratz & Roemer, 2004; Gross, 1998, 2002), and with limited use of non-clinical and other clinical control groups (e.g., OCD, anxiety/mood disorders) to establish specificity.

Many related constructs that could be important to TTM aetiology are yet to be investigated, such as distress tolerance (Simons & Gaher, 2005); negative urgency (impulsive action in response to negative affect; Whiteside & Lynam, 2001); and perceived control of anxiety (Brown, White, Forsyth, & Barlow, 2004). In other words, the role of emotion regulation in TTM appears to have been focused on experiential avoidance without open-ended investigation into the coping and emotion regulation styles and strategies utilised by individuals with TTM. Limited consideration for the interaction between cognition and affect has also contributed to this, although the frustrated action model of BFRBs (Roberts et al., 2015), as a specification of the emotion regulation model, is one such preliminary attempt to integrate the role of cognitions; this will be discussed in the following section.

3.7 Cognitive Models

Despite the inextricable influence of cognitions upon emotion (Beck, 1970, 1976; Ellis, 1962; Lazarus, 1982) and increasing support for an emotion regulation model of TTM (Roberts et al., 2013, 2015), the question of what cognitions and beliefs might contribute to TTM symptoms, and how, has rarely been considered. For instance, automatic cognitions relating to hair quality and symmetry have been proposed to act as

hairpulling cues for a minority of individuals with TTM (Mansueto et al., 1997). Besides some descriptive statistics on the frequency with which such cognitions are experienced in non-clinical samples (Duke et al., 2009; Duke, Keeley, Ricketts, et al., 2010), a specific research agenda focused upon illuminating the content and role of dysfunctional cognitions and beliefs in TTM, and expanding its currently preliminary cognitive models, remains to be set.

Gluhoski (1995) proposed a cognitive model of TTM that was predominantly based upon Beck, Wright, Newman and Liese's (1993) cognitive model of substance abuse. Gluhoski drew several parallels between TTM and substance abuse, such as low tolerance for anxiety, frustration and boredom; poor coping skills; low motivation for behaviour change; impulsivity; and a lack of consideration for the negative consequences of one's behaviour. As per the cognitive model of substance abuse (Beck et al., 1993), Gluhoski advocated for the importance of evaluating and challenging the beliefs and cognitions that precede hairpulling urges and behaviour in order to formulate appropriate behaviour change strategies.

Gluhoski's (1995) model can be broken down into four elements. First, the person with TTM enters a high risk situation – Gluhoski provided the example of vocationally-related situations involving tasks that were too challenging or not challenging enough. The demands of these situations are similar to Penzel's (2003) stimulus-regulation model, whereby hairpulling occurs in response to over- or under-stimulating situations. Second, the high risk situation activates intermediate beliefs (i.e., attitudes, assumptions, rules; Beck, 2011) about the value of hairpulling as a coping strategy (e.g., "pulling will make me feel better" and "it will distract me"; Gluhoski, 1995, p. 282). Surprisingly, Gluhoski did not entertain the role of core beliefs about the individuals' self-efficacy, or other deeply held beliefs about the very nature of one's

self, the world, and others (Beck, 2011). According to Beck et al. (1993), core beliefs of relevance to individuals with substance addiction can broadly be described as "'I am helpless', 'I am unlovable' or 'I am vulnerable'" (p. 52). Third, Gluhoski explained that automatic thoughts about the high risk situation (e.g., "I can't handle this" and "I won't do a good job", p. 282) elicit negative emotions, which then trigger an urge to pull. Fourth, the urge to pull is enacted upon following permission-giving beliefs (e.g., "I'll just pull one", p. 282), and so hairpulling commences. Interestingly, it appears that most examples of cognitions and beliefs Gluhoski assumed to be of relevance to TTM fundamentally reflected core beliefs relating to self-efficacy (e.g., Bandura, 1977) and high standards for performance and/or competency (e.g., Roberts et al., 2013, 2015).

Limited systematic evaluation of Gluhoski's (1995) cognitive model of TTM has occurred. The first empirical investigation into the relationship between TTM symptoms and cognitions was conducted by Norberg et al. (2007). They sampled 404 self-diagnosed (*DSM-IV-TR*) individuals with TTM via online self-report surveys, and reported that shame (measured in terms of participants' appraisals of how others perceive their self-worth), dysfunctional beliefs about physical appearance (not specifically hair-related), and fear of being negatively evaluated by others were positively correlated with TTM symptom severity (range of $r = .11 – .21$). Consistent with the hypothesised role of experiential avoidance in TTM (Begotka et al., 2004), these cognitions no longer significantly correlated with symptom severity once experiential avoidance was controlled for. Indeed, the size of correlations reported between the three cognitions scales and TTM symptom severity were small to begin with. This may indicate, as others have suggested (Mansueto et al., 1997), that cognitions are of minor significance to the experience of TTM. However, this contrasts with the repeatedly reported relationships between TTM and shame, perceptions of

unattractiveness, and avoidance of social relationships (Altenberger, Tung, & Keuthen, 2014; Casati et al., 2000; Hersperger, 2012; Noble, 2012; Stemberger et al., 2000; Weingarden & Renshaw, 2014; Wetterneck et al., 2006). It may be that these measures lacked sensitivity because the measures used to quantify cognitions were not specific to the experience of TTM (cf. Keuthen et al., 2012).

Perhaps the only other empirical support for Gluhoski's (1995) cognitive model of TTM comes from a recent investigation of the role of meta-cognition in tic behaviours and BFRBs (O'Connor et al., 2014). Through the development and validation of the Thinking About Tics Inventory, O'Connor et al. (2014) identified that thoughts about the interference of the behaviour (e.g., "thinking that your tics make you look bad"; thoughts about anticipating the impending onset of the behaviour (e.g., "noticing that you have not ticced in a while"); and permission-giving thoughts to perform the behaviour (e.g., "the idea that you must tic to feel relief") were significantly correlated with self-reported tic and BFRB severity. However, scores on the permission-giving subscale were significantly lower among BFRB participants (n = 36; 19 hairpullers) than among tic disorder/TS participants (n = 60). Additionally, only scores on the interference subscale significantly reduced among BFRB participants following 14-weeks of CBT (comprised of HRT and cognitive restructuring). As such, empirircal support for the role of permission-giving cognitions specifically in hair-pulling behaviour remains preliminary and requires investigation in *DSM*-diagnosed TTM samples.

Recently, Roberts et al. (2015) proposed the frustrated action model of BFRBs. This model provides a more specific version of the emotion regulation model, in that it relates to the experience of frustration, tension, stress, and boredom as key emotions that elicit BFRBs as regulation strategies. Roberts et al. made hypotheses about the

cognitive appraisals that specifically elicit frustrated affect and BFRBs; specifically, that individuals who engage in BFRBs have a trait-like style of activity planning, which comprises organisational perfectionism, difficulty with relaxation, and a need to feel productive. Such individuals are more likely to appraise themselves as having "not accomplished enough", are "wasting time" or are "not busy enough", and that they "should be doing more" (Roberts et al., 2015, p. 190). Roberts et al. suggested these high self-expectations increase one's vulnerability to experiencing frustration, tension, and boredom. When BFRBs are performed, frustrated affect is believed to decrease because cognitive appraisals of oneself as taking action or feeling productive are positively reinforcing. The Style of Planning Questionnaire (STOP) has been developed as a measure of behaviour associated with these hypothesised cognitions and beliefs relevant to BFRBs (O'Connor et al., 2015).

There is preliminary evidence for the frustrated action model. Roberts et al. (2015) performed an experimental study in which 24 adults with BFRBs (n = 6 with hairpulling) and 23 age- and sex-matched HC participants watched videos that elicited frustration, boredom, stress or relaxation, and then reported on the severity of the BFRB urges. Participants with BFRBs reported significantly greater urges across all conditions than did HC participants and urges were significantly greater amongst the BFRB group when feeling frustrated or bored than when they were feeling relaxed. Additionally, BFRB participants reported a significantly more dysfunctional style of activity planning than did HC participants, which was also strongly correlated with poorer emotion regulation (r = -.54). Finally, overactivity – a subscale of the STOP that reflects difficulty relaxing and attempting multiple tasks simultaneously, and that is correlated with perfectionism – was found to significantly reduce among individuals with BFRBs (n = 121) following behavioural treatment (O'Connor et al., 2015). These findings,

however, only provide indirect evidence that cognitions relating to high standards for personal organisation and the overvaluation of high productivity are particularly influential to TTM symptoms: (1) the STOP is a measure of planning style (i.e., self-reported behaviour) as opposed to a measure of beliefs about the value or meaning of such behaviour, and (2) neither the frustrated action model nor the STOP have been evaluated in *DSM* diagnosed TTM samples, only in pooled samples of individuals who experience various BFRBs.

Gluhoski's (1995) cognitive model of TTM was essentially an abbreviated version of the cognitive model of substance abuse (Beck et al., 1993), and appears to have been based upon clinical observations of shared phenomenology between the two disorders. Twenty years later, the model remains untested despite a hypothesised addiction-based subtype of TTM (Grant et al., 2007). Only recently has the potential role of cognitions and beliefs as precipitating and maintaining factors in TTM and BFRBs begun to attract interest (e.g., Norberg et al., 2007; O'Connor et al., 2014, 2015; Roberts et al., 2015), but an explicit agenda focused on outlining the content and function of cognitions in TTM remains absent. Regardless, cognitive therapies have been integrated with behavioural therapies to treat TTM, as will be discussed in Chapter 4.

3.8 Biopsychosocial Model

Franklin and colleagues (Franklin & Tolin, 2007; Franklin, Tolin & Diefenbach, 2006) proposed a biopsychosocial model of TTM and BFRBs in order to integrate the psychobiological, behavioural, stimulus/emotion regulation, and cognitive models reviewed above. As such, this model will only be briefly reviewed. This review will emphasise how the biopsychosocial model differs from the other models reviewed in

this chapter, and limitations will also be discussed. As per the focus of this thesis, the role of cognitions and beliefs according to the biopsychosocial model will be examined, particularly in light of recent advances in understanding the role of emotion regulation in TTM and BFRBs.

The biopsychosocial model specifies a biological vulnerability in three specific domains believed to contribute to TTM onset: (1) an increased drive to engage in BFRBs, (2) "increased perception of negative internal states", and (3) altered pain sensitivity (Franklin & Tolin, 2007, p. 17); each will be reviewed in turn. First, comorbidity between TTM and other BFRBs is high (Christenson, Mackenzie, et al., 1991, Stein et al., 2008), and the rates between TTM and SPD in particular are higher than would be expected by chance (Snorrason et al., 2012). The high heritability of non-cosmetic hairpulling (i.e., a BFRB as opposed to diagnosed TTM) has also been demonstrated (Novak et al., 2009). Second, "increased *perception* of negative internal states" (Franklin & Tolin, 2007, p. 17, emphasis added) may be more accurately described as increased *sensitivity* to negative affect, and physiological sensations including arousal. Given the recent advances in understanding the relationships between emotion regulation, experiential avoidance, and TTM and BFRBs (Norberg et al., 2007; Roberts et al., 2013, 2015; Shusterman et al., 2009), it may be appropriate to update the biopsychosocial model to suggest that rather than an increased perception or sensitivity to negative internal states, individuals with TTM may have a biological vulnerability to emotion dysregulation in particular. However, as explained throughout this chapter, the specific mechanisms implicated in these biologically-mediated vulnerability factors are still to be determined.

Third, unique to the biopsychosocial model is the assumption that individuals with TTM have an altered sense of pain perception. Children and adults with TTM

report that hairpulling is actually pleasurable and not experienced as painful (Chang, Lee, Chiang, & Lü, 1991; Christenson, Mackenzie, et al., 1991; Meunier, Tolin, & Franklin, 2009). However, studies have not investigated pain or sensory perception in humans with TTM, and studies that investigated analogue animal models of TTM have not found evidence of sensory perception abnormalities in barbering mice (Garner et al., 2004; Greer & Capecci, 2002; Welch et al., 2007). The absence of control group comparisons and longitudinal studies in the experience of pain or sensory perception in humans with TTM means that no conclusions can be made as to whether sensory perceptual differences do exist between individuals with or without TTM, and if so, whether pain perception is altered prior to disorder onset or perhaps changes over time as a result of repeated hairpulling.

The biopsychosocial model integrates classical and operant conditioning paradigms, as per behavioural models of TTM (e.g., Azrin & Nunn, 1973; Mansueto et al., 1997), to explain (a) how negative internal states and discriminative cues trigger hairpulling urges and behaviour, and (b) how negative and positive reinforcement maintains symptoms over time (Franklin & Tolin, 2007; Franklin et al., 2006). Also consistent with behavioural models, the negative social and emotional consequences of TTM (e.g., social isolation, financial costs on disguising hair loss, shame, etc.) are considered to exacerbate hairpulling behaviour by feeding back into the negative internal states that elicit urges and/or behaviour. Franklin and Tolin (2007) further suggest that negative self-evaluations, a sense of feeling out of control, and low self-esteem develop specifically from these adverse consequences, such that these cognitive-affective experiences become new cues that elicit hairpulling urges and behaviour.

Franklin and Tolin (2007) agree with others (e.g., Mansueto et al., 1997) that, for the majority of affected individuals, cognitions and beliefs are unlikely to play a

central role in TTM. When cognitions are relevant, they are proposed to result from the adverse social and emotional consequences of TTM, and/or contribute to the onset of hairpulling urges and behaviour "indirectly" via "the presence of intense and unremitting negative affect" (p. 138). As such, Franklin and Tolin conceptualised cognitive therapy as an adjunct to habit reversal therapy. However, now that there is strong evidence to suggest that emotion regulation forms a core function of hairpulling in TTM and BFRBs (Diefenbach et al., 2008; Roberts et al., 2013, 2015; Shusterman et al., 2009), it becomes unclear why cognitions should only be considered relevant if and when they indirectly lead to hairpulling urges via negative affect. Anxiety, frustration, and boredom may be considered universal cues for hairpulling urges and behaviour (Roberts et al., 2013). Cognitive theory suggests that perceptions, attitudes, and appraisals elicit affect, which influences behaviour (Beck, 2011). Assuming a cognitive behavioural model of TTM and its treatment (as per Franklin and Tolin's cognitive beheavioural treatment manual for TTM), cognitions and beliefs should arguably be considered essential in the pathway to hairpulling behaviour, even if only secondary to the adverse psychosocial consequences of the disorder or indirectly through the experience of negative affect.

3.9 Summary and Critique

This chapter reviewed the aetiological models that have been proposed to account for the onset and maintenance of TTM. Two early models have critically steered direction of contemporary research, diagnostic conceptualisation, and treatment developments for this disorder: (1) the phenomenological model of the compulsivity-impulsivity spectrum (e.g., Hollander, 1993; Hollander et al., 2006), and (2) behavioural models (e.g., Azrin & Nunn, 1973; Mansueto et al., 1997). The phenomenological model is limited in that it has typically attempted to draw comparisons between

compulsive and impulsive disorders in order to determine the extent to which TTM fits within these categories. However, as dimensional understandings of these two constructs has advanced (e.g., Fineberg et al., 2010, 2014), hypotheses that acknowledge the complex, myriad interactions of compulsive-impulsive constructs (namely, cognitive flexibility and response inhibition), and their psychobiological underpinnings, have emerged (Flessner et al., 2012). The phenomenological model has therefore played an essential role in driving genetic, animal, neuroimaging, and neuropsychological research in TTM over the past decade. However, this research is yet to differentiate the psychobiological mechanisms that specifically correspond to TTM, as opposed to putatively related disorders like OCD or TS.

The behavioural models propose that hairpulling is a learned behaviour and can therefore be unlearned by modifying the stimuli-behaviour associations that cue and maintain hairpulling (Azrin & Nunn, 1973; Mansueto et al., 1997). This has influenced the development of habit reversal therapy (Azrin et al., 1980), which is currently considered the first-line treatment of TTM (Franklin et al., 2011; Grant et al., 2015). Behavioural models and therapies reduce the maintenance of TTM to the control of environmental contingencies and learned associations. Emotions and cognitions are acknowledged within the ComB model (Mansueto et al., 1997, 1999; Stemberger et al., 2003), but cognitive-affective factors are viewed as behavioural cues or triggers to be identified and controlled. The ComB model provides no speculation as to the underlying vulnerabilities that make automatic reinforcement (cf. Miltenberger et al., 1998; Rapp et al., 1999) so stimulating for individuals who develop TTM as opposed to the majority of individuals who engage in hair manipulation and hairpulling (e.g., when anxious), but who do not develop clinically significant hairpulling (e.g., Duke et al., 2009; Ghisi et al., 2013; Stanley et al., 1994; Woods & Miltenberger, 1996).

To account for this limitation, the stimulus regulation model (Penzel, 2003) proposed that individuals with TTM are predisposed to poor regulation of physiological sensations. As these individuals are predisposed to experiencing over- or under-stimulation, Penzel (2003) suggested that they are therefore more likely to resort to hairpulling in order to restore nervous system homeostasis. The stimulus regulation model is vague and lacks testable hypotheses, but may be refined by referring to similar models of tic disorders and TS (O'Connor, 2002). With an emotion regulation model, Roberts and colleagues proposed that individuals with BFRBs are vulnerable to experiencing dysregulated affect, and therefore engage in BFRBs to reduce tension, anxiety, and frustration (Roberts et al., 2013, 2015). The model is testable; can be integrated with, and is complementary to, the ComB model; and additionally, it attempts to explain the underlying dysfunction that makes some people more prone to developing distressing and disabling BFRBs. Specific evaluation of the emotion regulation model in TTM-only samples is still required.

The emotion regulation model has led to speculation that perfectionism and other cognitive appraisals associated with frustration could be particularly relevant to BFFB development (Roberts et al., 2013, 2015). A cognitive model of TTM was proposed two decades ago (Gluhoski, 1995) but has not been evaluated nor did it instigate substantial research on the role of cognitions and beliefs in TTM; perhaps because beliefs assumed to be of relevance to TTM were drawn from a cognitive model of substance abuse (Beck et al., 1993), but without any direct comparison studies examining the similarities and differences between TTM and substance/alcohol abuse disorders. As a result, there is no unified or evidence-based cognitive behavioural model of TTM, as has been illuminated within this chapter. Nevertheless, cognitive behavioural manuals (Franklin & Tolin, 2007; Rothbaum, 1992; Stanley & Mouton,

1996) and treatments (Keuthen et al., 2010; Lerner, Franklin, Meadows, Hembree, & Foa, 1998; Woods, Wetterneck, et al., 2006) have been developed and evaluated for TTM. These treatments form the focus of the following chapter.

4. CHAPTER 4 – Cognitive Behavioural Approaches to Trichotillomania

4.1 Introduction

This chapter will review the cognitive behavioural therapy (CBT) approaches to treating TTM. Three main CBT approaches have been utilised: (1) habit reversal therapy (HRT), which has been used as a standalone behavioural therapy (BT) or augmented with cognitive therapies (i.e., standard CBT); (2) acceptance and commitment therapy, which has typically been augmented with HRT; and (3) dialectical behaviour therapy, which has typically been augmented with HRT and standard CBT strategies. This chapter will provide an overview of the theoretical underpinnings of each approach before critically reviewing the empirical support for their efficacy in reducing TTM symptoms. As has been established in the preceding chapter, the role of cognitions and beliefs in TTM appears to have been over-looked and rarely investigated as a result. This constitutes a key limitation to the CBT approaches utilised to treat TTM. To conclude this chapter, unresolved issues in understanding and addressing the cognitive factors that might be important for enhancing CBT for TTM will be presented.

4.2 Cognitive Behavioural Therapy for TTM

Cognitive theory purports that dysfunctional cognitions – the biased or irrational appraisals, attitudes, and interpretations made about the world, situations/events, oneself, and others – elicit unpleasant emotions and physiological sensations, which influences one's behavioural responses (Beck, 1970, 1976; Ellis, 1962; Lazarus, 1982). If uncorrected, dysfunctional cognitions influence the development of maladaptive behaviour, mood and ultimately, psychopathology (Beck, 1970, 1976). By contrast, behavioural theory purports that the maladaptive behaviours that maintain

psychopathology are learned via classical and operant conditioning; two processes in which the analysis of observable (external) stimuli-response relationships are emphasised (as explained in section 3.5; for a summary, see Hawton, Salkovskis, Kirk, & Clark, 1989). In combining the two theories, CBT purports that symptoms of psychopathology can be improved by supporting individuals to unlearn and replace the maladaptive patterns of interpreting and responding to internal and external stimuli (Beck, 1970; Beck, 2011). Early conceptualisations of TTM were behavioural, and as such, BT for TTM – specifically, HRT (Azrin & Nunn, 1973, Azrin et al., 1980) – emerged before cognitive therapy was incorporated to form standard CBT for TTM.

4.2.1 Habit reversal therapy. HRT was developed to extinguish habits such as nail-biting, hairpulling, tics, and other stereotypic behaviours by reversing (i.e., removing or modifying) the factors that contribute to the automatic reinforcement of these behaviours (Azrin & Nunn, 1973). Thirteen components comprised the original HRT protocol developed for TTM by Azrin et al. (1980), including: (1) awareness training and identification of precursory behaviours and situations; (2) competing response practice (i.e., performing a motor response that interferes with completing the habit); (3) relaxation training; (4) completing a habit inconvenience review to enhance treatment motivation; and (5) recruiting social support to enhance treatment compliance.

Following positive results from a pilot trial of HRT for a variety of habits (Azrin & Nunn, 1973), Azrin et al. (1980) conducted a randomised control trial (RCT) of HRT for hairpulling compared to negative practice training. Participants were 10 males and 24 females (M_{age} = 28.0, n = 4 aged ≤ 16 years) who had been hairpulling for 12 years on average. Twenty-one participants were described as having very evident hair loss and engaged in an average of 49 hairpulling episodes each day (although it is unclear how hairpulling "episodes" were defined). Nineteen participants received HRT, which

was delivered in a single two-hour session with a therapist, during which participants received training on the aforementioned 13 HRT components. One participant opted out of HRT following the second week due to near-complete symptom remission. Fifteen participants received negative practice training, which was also delivered in a single two-hour session with a therapist. Negative practice involved performing the hairpulling gestures without actual hair removal for 30 seconds every hour, for four days. Participants were instructed to gradually reduce their performance of negative practice over a two week period. One participant opted out of negative practice due to a lack of symptom improvement. All participants were required to record the number of hairpulling episodes they engaged in each day for seven days prior to treatment, then to report a weekly total of hairpulling episodes at the first month post-treatment, and at four- and 22-month follow-up (Azrin et al., 1980).

Participants who received HRT reported a 99% reduction to hairpulling episodes on the first day following treatment compared to a 58% reduction achieved in the negative practice group (Azrin et al., 1980). At four-month follow-up, HRT participants had maintained a 91% reduction to hairpulling episodes. By contrast, participants who had received negative practice training reported a 52 – 68% reduction at three-month follow-up, and only eight of 14 negative practice participants remained in the trial at this point. Data beyond three months was not reported for this condition due to the drop-out rate; however, it is important to note that at least some HRT participants received therapeutic telephone calls up to three months post-treatment. Data on how many participants received this support and details on specifically what this support entailed were not provided. At 22-month follow-up, the 18 remaining HRT participants had maintained an 87% reduction in hairpulling episodes (Azrin et al., 1980).

While several case studies and uncontrolled trials have reported positive outcomes of HRT (for a summary, see Elliott & Fuqua, 2000), to date, the outcomes obtained by Azrin et al. (1980) are the most successful reported for TTM in a controlled trial. In the only other RCT, van Minnen, Hoogduin, Keijsers, Hellenbrand, and Hendriks (2003) compared six sessions of HRT over 12 weeks to either SSRI treatment with fluoxetine (60mg/day) or a waiting list (WL). In this trial, HRT was comprised of: (1) awareness training and self monitoring; (2) stimulus control (i.e., avoiding or modifying high risk stimuli/situations that elicit or are associated with hairpulling); (3) stimulus-response prevention (i.e., interrupting hairpulling urges and/or behaviour by performing incompatible activities); and (4) using self-rewards to reinforce more adaptive behaviour in place of hairpulling. Participants included 38 females and five males (M_{age} = 31.9, range = 17 – 57 years) whose symptoms met *DSM-IV-TR* criteria for TTM. Mean disorder duration was 19 years. One participant opted out of HRT and two opted out of fluoxetine treatment. The Massachusetts General Hospital Hair Pulling Scale (MGHHPS; Keuthen et al., 1995) was the primary outcome measure; it measures self-reported severity of hairpulling urges and behaviour in the previous week.

van Minnen et al. (2003) found that from pre- to post-treatment, HRT resulted in a significantly greater reduction of MGHHPS scores than fluoxetine or WL. Clinically significant change was defined as a post-treatment MGHHPS score of ≤ 6, which was achieved by 64% of HRT participants (n = 9/14), 9% of fluoxetine participants (n = 1/11), and 20% of WL participants (n = 3/15). Following the trial, WL participants were offered HRT. Keijsers et al. (2006) evaluated longer term outcomes of both initial and WL receivers of HRT (n = 28) from van Minnen and colleague's trial. At 24-month follow-up, only three of 24 participants whose data were complete remained symptom-free and six participants had maintained a 50% or more reduction in MGHHPS scores.

Two participants reported a >30% increase in TTM severity from baseline (Keijsers et al., 2006). It is not possible to directly compare symptom reduction rates between the studies of Azrin et al. (1980) with van Minnen et al. (2003) and Keijsers et al. (2006) because of the different symptom measures utilised. However, complete symptom remission occurred for a greater proportion of participants in Azrin and colleague's study at four weeks post-treatment (67%, n = 12/18) compared to those in Keijsers and colleague's study immediately post-treatment (54%, n = 15/28). Keijsers et al. concluded that, even despite the novel inclusion of relapse prevention strategies in their HRT protocol, participants experienced poorer maintenance of gains in the moderate-to-long term than reported by Azrin et al.

There are several possible explanations as to why HRT outcomes differed between the trials of Azrin et al. (1980), and van Minnen et al. (2003) and Keisjers et al. (2006). One, it cannot be determined that participants' symptoms in Azrin and colleague's study met diagnostic criteria for TTM, as TTM was not a recognised psychiatric disorder until 1987 (APA, 1987). For instance, one participant engaged in hair twirling as opposed to actual hairpulling. While symptom duration and the extent of hair loss appears to have been significant, without an indication that participants experienced significant disability or distress, it may be that Azrin and colleague's participants did indeed experience something more akin to a habit as opposed to a psychological disorder. Two, there was no indication of comorbid pychopathology experienced by participants in Azrin and colleague's study. Keijsers et al. (2006) reported that higher pre-treatment depression scores predicted greater TTM severity at 24-month follow-up, which suggests that depression may moderate treatment outcomes, as others have suggested (Keuthen et al., 2000; Lerner et al., 1998). This is a significant factor to account for, given that approximately 50% of individuals with TTM report a comorbid mood

disorder (Christenson, Mackenzie, et al., 1991; Lochner, Seedat, et al., 2005; Lochner, Simeon, et al., 2002).

Third, there were many differences to the components utilised in the HRT protocols of Azrin et al. (1980) and van Minnen et al. (2003). Contemporary HRT for TTM tends not to include many of the original components included in Azrin and colleague's protocol, such as motivational enhancement strategies, enlistment of social support, and relaxation training (although in clinical practice, this is not necessarily the case; Flessner et al., 2010). Contemporary HRT now closely resembles the protocol of van Minnen et al., and is comprised of three core strategies: (1) awareness training and self-monitoring, (2) stimulus control, and (3) competing response practice (Franklin et al., 2011; Franklin & Tolin, 2007; Morris et al., 2013). Additions to this core approach – many of which were originally included by Azrin et al. – have now been reframed as optional, augmentative strategies (e.g., Franklin & Tolin, 2007). Despite the apparent evolution of HRT for TTM in the previous 35 years, there has been limited investigation into which HRT components are responsible for eliciting behaviour change. In their narrative review of HRT efficacy, Himle et al. (2004) concluded that the awareness training and competing response strategies have shown efficacy for reducing motor tics and nail-biting in child and adolescent samples, whereas social support strategies may not be a necessary component to reduce nail-biting in adults. In their RCT of combined HRT and acceptance and commitment therapy, Woods, Wetterneck, et al. (2006) found that participants reported that the most useful components of HRT were awareness training and competing response. Clearly, component efficacy studies are required to elucidate the specific HRT strategies that elicit behaviour change in TTM.

4.1.2 Standard cognitive behavioural therapy for TTM. Long-term maintenance of symptom improvement following HRT for TTM is poor (Keijsers et al.,

2006). This may be because contemporary HRT fails to target the complete phenomenological picture of antecedent and maintaining factors relevant to TTM, including emotions and cognitions. In recognition that even "automatic" behaviours such as cigarette smoking and overeating can be influenced by cognitions, Ottens (1981) proposed utilising standard CBT for TTM. Ottens' nine-week CBT protocol emphasised identification and restructuring of maladaptive self-directed statements. This treatment resulted in a reduction from 145 hairpulling episodes at baseline to no hairpulling episodes at 35-weeks follow-up in an 18 year old female who had reportedly pulled her hair daily since the age of 13.

Rothbaum and colleagues (Rothbaum, 1992; Rothbaum & Ninan, 1999) proposed a similar nine-week CBT protocol in which three sessions were devoted to thought-stopping, cognitive restructuring, and guided self-dialogue. Treatment also included the complete HRT protocol of Azrin et al. (1980), deep breathing and progressive muscle relaxation training, modelling and role-play, and relapse prevention. Ninan, Rothbaum, Marsteller, Knight, and Eccard (2000) compared CBT to a nine-week course of tricyclic antidepressant, clomipramine (50 – 250mg/day), or a placebo pill. Of 23 participants whose symptoms met *DSM-III-R* criteria for TTM, 16 completed treatment (13 females, M_{age} = 33 years). Five participants completed CBT, six received clomipramine, and five received a placebo pill. From pre- to post-treatment, Ninan et al. found that CBT significantly reduced symptom severity and impairment more so than did clomipramine or placebo. Additionally, 100% of CBT completers were considered treatment responders according to a score of ≤ 2 on the Clinical Global Impressions Improvement scale (CGI-I; Guy, 1976). By contrast, 67% and 0% of clomipramine and placebo completers were considered treatment responders, respectively. This study did not perform longer-term follow-up.

Diefenbach, Tolin, Hannan, Maltby, and Crocetto (2006) compared supportive group therapy to group-based CBT, both delivered over eight weeks. Diefenbach and colleague's CBT protocol was similar to that of Rothbaum and colleague's (Ninan et al., 2000; Rothbaum, 1992; Rothbaum & Ninan, 1999), but cognitive therapy was reduced to two sessions. Supportive group therapy entailed participants discussing their experiences of TTM in an empathic, therapist-facilitated environment. Participants included 28 adults whose symptoms met full or modified *DSM-IV* criteria for TTM. Four participants withdrew from the study prior to commencing treatment. The remaining 24 participants (22 females, M_{age} = 39.7 years) were randomised into group CBT (n = 12) or supportive group therapy (n = 12). Three participants opted out of CBT and two from supportive therapy during the trial, and these participants were found to have significantly more severe TTM symptoms than treatment-completers.

Self-reported TTM severity as measured by the MGHHPS was found to significantly decrease from pre- to post-treatment for the CBT group but not for the supportive therapy group (Diefenbach et al., 2006). This is partially consistent with a recent trial comparing a longer, 22-session group CBT protocol with supportive group therapy (n = 22 per group; Toldeo, Muniz, Brito, de Abreu, & Tavares, 2014). Toledo et al. (2014) found that CBT was significantly more effective than supportive group therapy, but *both* interventions produced significant pre- to post-treatment MGHHPS reductions. Diefenbach et al. (2006), by contrast, found that between one- and six-month follow-up, there were no longer significant differences in MGHHPS scores between the CBT and supportive therapy groups. Diefenbach et al. defined clinically significant change as a MGHHPS score of ≤ 6. They found that a greater proportion of supportive therapy participants (25%, n = 3/12) than CBT participants (16.7%, n = 2/12) achieved clinically significant change post-treatment, although this difference was not

statistically significant. There were no statistically significant group differences in clinically significant change at each follow-up time point. This suggested that while CBT resulted in significant pre- to post-treatment gains, these gains were not maintained at six-month follow-up, and by this time, symptom severity between CBT and supportive group therapy conditions were equivalent (Diefenbach et al., 2006). The trial performed by Toledo et al. did not include a follow-up period so it remains unknown if an extended group CBT protocol could potentially produce greater gain maintenance.

Deifenbach et al. (2006) speculated that the efficacy of CBT may have been weakened as a result of the group format employed in their study. The proportion of post-treatment responders identified in Diefenbach and colleague's CBT trial (16.7%) is substantially lower than the rates of 50 – 100% reported by several other controlled and uncontrolled trials of individually-delivered CBT or HRT (Lerner et al., 1998; Ninan et al., 2000; van Minnen et al., 2003) and compared to the 91% of treatment responders identified in Toledo and colleague's (2014) extended group CBT. However, it should be noted that intention-to-treat analyses suggested that 66.7% of CBT participants in Diefenbach and colleague's study were expected to have achieved clinically significant improvements. Treatment credibility, satisfaction, and group cohesion was rated significantly higher in the CBT group than in the supportive therapy group (Diefenbach et al., 2006), so a lack of statistical power may have contributed to poorer than expected long-term outcomes.

A recent meta-analysis of nine RCTs for TTM (Slikboer et al., 2015) discovered that the efficacy of various forms of CBT/BT is clearly shown when they are compared to a passive control group (e.g., WL), but for two studies that compared CBT/BT to an active control group (Diefenbach et al., 2006; Moritz & Rufer, 2011), significant post-

treatment differences in TTM severity were not demonstrated. This meta-analysis did not include the group CBT versus group supportive therapy trial of Toledo et al. (2014). As discussed, Diefenbach and colleague's (2006) study involved supportive group therapy. Moritz and Rufer (2011) compared movement decoupling (similar to negative practice training) as a form of BT to progressive muscle relaxation, and both interventions were delivered via an electronic treatment manual implemented by participants without therapist support (Moritz & Rufer, 2011). To explain the equivalent symptom reductions achieved in RCTs utilising active control groups, Slikboer et al. (2015) and others (Rehm et al., 2015) speculated that there may be other change mechanisms that produce symptom improvement in TTM (e.g., reducing shame, enhancing sense of control or autonomy), but which are not specifically accounted for within current applications of BT/CBT for TTM. For instance, Pélissier and O'Connor (2004) reported successful treatment of TTM in a 23 year old woman following 18 weekly sessions of standard CBT; her symptoms reduced from an average 24 hairs pulled each day to an average one hair pulled each week. Unique to this CBT intervention was the use of strategies that specifically addressed the perfectionistic and self-critical beliefs identified as hairpulling cues for this individual. Brief relapses were reported at 12- and 18-month follow-up.

Another alternative, but non-mutually exclusive explanation may be derived from the consistently reported longer-term symptom reductions achieved with third-wave CBTs, acceptance and commitment therapy (e.g., Woods, Wetterneck, et al., 2006) and dialectical behaviour therapy (e.g., Keuthen et al., 2010). Unlike standard CBT, these interventions seek not to change the content of maladaptive cognitions and beliefs, but to improve the individuals' relationship with them. Targeting as yet unaccounted for maladaptive cognitive variables (Rehm et al., 2015; Slikboer et al.,

2015) and/or utilising alternative therapeutic change processes may be responsible for reducing TTM symptoms.

4.3 Third-wave Cognitive Behavioural Therapies for TTM

4.3.1 Acceptance and commitment therapy. Acceptance and commitment therapy (ACT) is a third-wave CBT derived from relational frame theory (Hayes, Luoma, Bond, Masuda, & Lillis, 2006; Hayes, Strosahl, & Wilson, 2003). As summarised by Hayes et al. (2006), there are three core assumptions of relational frame theory: (1) human cognition is a form of learned behaviour; (2) cognition influences behaviour and the learning principles that govern behaviour; and (3) the regulatory function of cognition is based upon the contingencies (i.e., context) of a situation (for a comprehensive explanation of relational frame theory, see Hayes et al., 2003). In the case of psychopathology, impaired or inflexible relational framing (cognitive/verbal) abilities result in an inability to alter one's behaviour according to environmental/situational contingencies to achieve long-term valued outcomes (Hayes et al., 2006). This process is referred to as psychological inflexibility, which comprises six core features: (1) poor self-knowledge; (2) a lack of clear values; (3) a behavioural pattern of inactivity, reactivity, and impulsivity; (4) attachment to verbal descriptions of the self; (5) cognitive fusion (i.e., treating thoughts literally); and (6) experiential avoidance, which is considered a key maintaining factor in many psychological disorders, including TTM (e.g., Begotka et al., 2004; for a review, see Chawla & Ostafin, 2007). ACT seeks to improve psychological flexibility by addressing each of the aforementioned six processes, and in doing so, aims to reduce the severity of psychopathology by increasing acceptance of internal experiences, and by increasing commitment to, and action in service of, core values (Hayes et al., 2006).

Wetterneck and Woods (2007) applied concepts of relational frame theory in their development of the contemporary behaviour analytic model of TTM, which expands Mansueto and colleague's ComB model (Mansueto et al., 1997, 1999; Stemberger et al., 2003). Wetterneck and Woods proposed that when hairpulling initially develops during childhood, it is automatic and maintained via direct stimuli-behaviour contingencies. As the child develops, so too does their relational framing abilities; this means that hairpulling increasingly becomes a verbally-described event, such that verbal/cognitive associations (i.e., rules) alone start to elicit hairpulling urges and/or behaviour even in the absence of direct contingencies. In other words, hairpulling urges and/or behaviour can be elicited with imagination, memory, imagery, and other verbal/cognitive cues and associations. Automatic hairpulling is therefore considered a contingency-controlled behaviour whereas focused hairpulling is a verbal/cognitive rule-controlled behaviour. Due to the different processes governing these two hairpulling styles, Wetterneck and Woods argued that automatic hairpulling should be treated by addressing behavioural contingencies (e.g., via HRT) whereas focused hairpulling should be treated by targeting verbal/cognitive rules (e.g., via ACT). Given the overlap between direct contingency-controlled and rule-controlled hairpulling, Wetterneck and Woods argued for a blended HRT/ACT approach for treating TTM, termed acceptance-enhanced behaviour therapy (AEBT).

Following positive outcomes for four of six adults with TTM who received AEBT in an uncontrolled pilot study (Twohig & Woods, 2004), Woods, Wetterneck, et al. (2006) conducted a RCT with a WL comparison group. AEBT was comprised of 10 sessions over 12 weeks. The first session provided psychoeducation and orientation to therapy followed by five sessions of ACT strategies (e.g., values identification, cognitive defusion, acceptance and willingness exercises); three sessions of HRT

(stimulus control, awareness training, competing response, social support); and a final session on relapse prevention. Participants included 25 females and three males (M_{age} = 35 years) whose symptoms met *DSM-IV* criteria for TTM. Two participants opted out of AEBT and one participant opted out of the WL group. Participants who opted out reported significantly more severe depression symptoms than did trial completers.

From pre- to post-treatment, AEBT participants (n = 12) reported a 45% reduction in TTM severity, as measured by the MGHHPS, while WL participants (n = 13) reported no reduction (Woods, Wetterneck, et al., 2006). Additionally, 66% of AEBT participants were classified as having achieved clinically significant improvement, operationalised as a MGHHPS score of < 13, compared to 8% of WL participants. Clinician-rated TTM severity, as measured by the NIMH-TIS, and self-reported number of daily hairs pulled also recorded significant reductions from pre- to post-treatment for AEBT participants, but not WL participants. By three-month follow-up, MGHHPS scores had significantly increased from post-treatment levels for AEBT participants, but clinician-rated TTM severity and number of daily hairs pulled remained stable. Levels of experiential avoidance, as measured by the Acceptance and Action Questionnaire (AAQ; Hayes et al., 2004), reduced by 13% for AEBT participants and increased 6% for WL participants. Reductions were maintained at three-month follow-up for AEBT recipients. Moreover, decreases in experiential avoidance significantly and moderately correlated with decreases in MGHHPS scores (r = .59), suggesting that experiential avoidance may act as a change mechanism in TTM (Woods, Wetterneck, et al., 2006). Finally, AEBT participants, but not WL participants, reported significant decreases to depressive and anxiety symptoms, which were maintained at three-month follow-up. Overall, Woods, Wetterneck, et al. (2006) concluded that AEBT was an acceptable and effective treatment for TTM, although

follow-up beyond three months is required to better assess the longevity of gain maintenance.

Uncontrolled trials (Crosby, Dehlin, Mitchell, & Twohig, 2012), case studies (Fine et al., 2012), and a qualitatively-evaluated pilot study of group-delivered AEBT (Walderhaug, 2015) have continued to report positive outcomes for reducing TTM symptoms. The evidence for ACT-based treatments for TTM and other OCRDs is in its infancy. A recent preliminary meta-analysis of nine RCTs of ACT for anxiety disorders and OCRDs concluded that there is only modest support for its efficacy (Bluett, Homan, Morrison, Levin, & Twohig, 2014). Specifically, there was a non-significant small effect size favouring ACT over various comparison conditions, which included WL control groups and other manualised CBT conditions. When only ACT versus CBT conditions were included in the meta-analysis (n = 5 trials), both interventions were found to have equivalent effects on primary outcome measures and on experiential avoidance as a behaviour change process. Such findings, while preliminary, raise important questions about exactly what are the fundamental change mechanisms within standard and third-wave CBT approaches for anxiety disorders and OCRDs (Bluett et al., 2014). In an attempt to elucidate such mechanisms, the next steps in evaluating AEBT for TTM should focus on comparing AEBT with active control groups (e.g., supportive therapy, standard CBT, HRT alone) and evaluate a wider range of potential mediating and moderating factors than just experiential avoidance.

4.3.2 Dialectical behaviour therapy. Dialectical behaviour therapy (DBT) was originally developed as a treatment for BPD (Linehan, 1993a). Linehan's (1993a) biosocial theory of BPD proposed that at the core of this disorder is emotion dysregulation, which permeates into the dysregulation of cognition, behaviour, physiology, and identity. Dialectics refers to the integration or synthesis of opposites,

and as a philosophical worldview, posits that reality is the composition of interrelated parts that cannot be understood without reference to the whole system (Linehan, 1993a). The overarching goal of DBT for BPD is therefore to reduce ineffective and disruptive behaviours associated with dysregulated emotions, such that improved regulation in this domain will transfer to holistically improved cognitive, behavioural, physiological, and self regulation. DBT achieves this through four core skills development targets, each of which is delivered in a therapeutic framework that emphasises acceptance and change, simultaneously, within the client: (1) mindfulness, to support the client to non-judgmentally observe, describe, and experience their internal states; (2) skills to support identification and adaptive modulation of emotions (i.e., emotion regulation); (3) interpersonal effectiveness skills, including assertiveness; and (4) distress tolerance skills, including the ability to "sit with" distress without reacting impulsively (Linehan, 1993b; Neacsiu, Eberle, Kramer, Wiesmann, & Linehan, 2014).

Although DBT was originally a BPD-specific treatment, it has recently been applied to a number of psychological issues in which emotion dysregulation is considered a core maintaining factor, such as mood and anxiety disorders, eating disorders, and aggression (Frazier & Vela, 2014; Lenz, Taylor, Fleming, & Serman, 2014; Neacsiu et al., 2014). Keuthen et al. (2010) piloted a modified version of DBT for TTM on the basis that (1) focused hairpulling in particular is considered to serve a maladaptive emotion regulation function; (2) fluctuation of negative affect across the hairpulling cycle has been consistently reported in the literature; and (3) TTM samples report high levels of comorbid anxiety and depressive symptomatology. Keuthen and colleague's treatment protocol comprised mindfulness, emotion regulation, and distress tolerance skills training components. Training in interpersonal effectiveness was omitted as this was not deemed relevant to TTM. Additionally, HRT in the form of

competing response training, stimulus control, and self-monitoring was included in the first two sessions. There were a total of 15 sessions, the first 11 of which were delivered weekly. The remaining four sessions were delivered at two, four, eight and 12 weeks post-treatment, and were designed as booster sessions to promote review of treatment strategies and relapse prevention (i.e., maintenance).

Keuthen and colleague's (2010) DBT-enhanced CBT was piloted with 10 females with a primary diagnosis *DSM-IV* TTM and a minimum pre-treatment MGHHPS score of 10. No participants opted out of the trial. At post-treatment, eight participants were considered treatment responders as per a CGI score of ≤ 2 and a ≥ 35% decrease in MGHHPS scores. TTM impairment also significantly improved, as did depression and anxiety symptoms, and emotion regulation skills. Treatment gains were maintained at three-month maintenance (i.e., following completion of the final booster session). TTM severity and emotion regulation measures showed maintenance of gains at three- and six-month follow-up (i.e., post-maintenance; Keuthen et al., 2011). By six-month follow-up, five of eight participants remained full treatment responders. Additionally, there was correlational evidence that improved emotion regulation may have acted as a change mechanism (Keuthen et al., 2010, 2011).

A single RCT has been conducted to evaluate DBT-enhanced CBT for TTM (Keuthen et al., 2012). Treatment was compared to a minimal attention control (MAC) group whereby participants received weekly telephone calls to monitor safety, stressors, general functioning, and medication use. TTM symptoms were not discussed unless initiated by the participant. Utilising the same eligibility criteria as per the pilot trial (Keuthen et al., 2010), participants included 38 adults (31 females, M_{age} = 30.7 years) whose symptoms met *DSM-IV* criteria for TTM. Average disorder duration was 17.13 years. Twenty participants were randomised to receive DBT, of whom, two opted out.

Following completion of the trial, the 18 MAC participants were offered DBT, of whom, three opted out of treatment. The only significant difference between completers and non-completers was that non-completers reported better emotion regulation skills at baseline. Primary TTM outcome measures included self-reported severity (MGHHPS) and clinician-rated severity and impairment (NIMH-TSS and NIMH-TIS, respectively). There were several self-reported outcome measures of emotion regulation: experiential avoidance (AAQ), the Difficulties in Emotion Regulation Scale (DERS; Gratz & Roemer, 2004), the Generalized Expectancy for Negative Mood Regulation Scale (NMR; Catanzaro & Mearns, 1990), and the Affective Regulation Rating (ARR); a measure of how well individuals can modulate the experience of 12 emotions identified to be of particular relevance to TTM (e.g., boredom, tension), adapted from the original scale developed by Shusterman et al. (2009).

From pre- to post-treatment, DBT participants reported significant improvements to TTM severity and impairment, depression and anxiety, experiential avoidance, and improvements to emotion regulation as measured by the NMR and ARR scales (Keuthen et al., 2012). Post-treatment improvements to TTM symptoms and emotion regulation were significantly greater for DBT participants than MAC participants. However, MAC participants did report significant reductions in experiential avoidance and depression symptoms from pre- to post-treatment. Post-treatment, 11 DBT participants (61.1%) were considered treatment responders (using pilot study criteria; Keuthen et al., 2010) compared to one MAC participant. Significant improvements to TTM measures were maintained for DBT participants at three-month maintenance, and three- to six-month follow-up. At all follow-up points, reduced TTM severity and impairment was correlated with improved ARR scores. Only at six-month follow-up was reduced TTM severity and impairment correlated with reduced

experiential avoidance. Also at six-month follow-up, reduced TTM impairment, but not severity, was correlated with improved *cognitive* regulation of emotions, but not behavioural regulation as measured by NMR subscales. DERS scores were not associated with any TTM outcome measures at follow-up.

In summary, DBT-enhanced CBT maintains reductions to self- and clinician-rated TTM symptoms for up to six months following treatment completion (Keuthen et al., 2011, 2012). However, the role of emotion regulation constructs as change mechanisms in this process is somewhat ambiguous. TTM symptoms (MGHHPS, TSS, TIS) were not correlated with experiential avoidance or any measures of emotion regulation at baseline, nor from pre- to post-treatment (Keuthen et al., 2012). Only some emotion regulation measures (ARR, NMR cognitive subscale) correlated with change scores on some TTM symptom measures at three- and six-month follow-up. Keuthen et al. (2012) proposed two explanations for this; one being that concurrently comorbid psychopathology – particularly for mood disorders – was low in this sample due to exclusion criteria, and two being that the DERS and NMR specifically focus on regulating depression and anxiety states. As such, the ARR, which was developed to assess affective states of specific relevance to TTM (e.g., boredom, tension) may have been more sensitive to treatment changes. This highlights the importance of developing measures specific to TTM phenomenology.

4.4 Limitations and Unresolved Issues in CBT Approaches to TTM

4.4.1 Methodological limitations. CBT trials for TTM are limited by several factors, including: small sample sizes (i.e., typically < 20 per group); varying inclusion criteria for the severity, primacy, and diagnostic requirements of TTM symptoms (i.e., full or modified *DSM* criteria); varying degrees of control for comorbid mood and

anxiety disorders and symptoms; the non-standardised and multi-component nature of treatments evaluated; and limited use of active control group comparisons. Additionally, the measures utilised to assess TTM outcomes each have their limitations, namely, a lack of rigorous and replicated psychometric validation (Diefenbach, Tolin, Crocetto, Maltby, & Hannan, 2005; McGuire et al., 2012).

Besides Azrin and colleague's trial of HRT (1980), all studies included in this review of cognitive behaviour therapies for TTM utilised the MGHHPS as a primary self-report outcome measure. Adapted from the Yale-Brown Obsessive-Compulsive Sscale (Goodman et al., 1989), the MGHHPS items replaced the original word of "obsessions" with "urges" (Keuthen et al., 1995). While the MGHHPS has good internal consistency ($\alpha = .80 – .89$; Bauer, 2014; Diefenbach, Tolin, Crocetto, et al., 2005; Keuthen et al., 1995; Keuthen et al., 2007) three of its seven items refer to frequency, intensity, and control of *urges*. As previously discussed in Chapter 2, urges (i.e., an increasing sense of tension) are no longer considered a core feature of TTM phenomenology (*DSM-5*; APA, 2013); a change that reflected the high proportion of individuals who did not endorse the experience of tension or urges under previous diagnostic schedules, but who nevertheless had clinically significant hairpulling symptoms (e.g., Christenson, Mackenzie, et al., 1991; Woods, Flessner, et al., 2006). In light of the *DSM-5* changes, the construct validity of the MGHHPS may now require new testing with *DSM-5* diagnosed individuals with TTM. Even under the previous diagnostic criteria, the MGHHPS has shown much more variability in its correlations with clinician-rated measures of TTM severity (Bauer, 2014; Diefenbach, Tolin, Crocetto, et al., 2005). The MGHHPS has additionally shown poor test-retest reliability (Bauer, 2014), which raises issues around the reliability of interpreting treatment

changes using this measure; particularly, as this is the most widely used self-report measure of TTM severity.

Commonly used clinician-rated outcome measures in the studies reviewed above were the NIMH-TSS and NIMH-TIS (Swedo et al., 1989), which respectively assess symptom severity and impairment, and the CGI (Guy, 1976), which assesses global severity. The inter-rater reliability and convergent validity of the NIMH-TSS has been particularly poor (Diefenbach, Tolin, Crocetto, et al., 2005; Stanley, Breckenridge, Snyder, & Novy, 1999), such that Diefenbach, Tolin, Crocetto, et al. (2005) did not endorse its use. However, the NIMH-TIS has received support for its inter-rater reliability, test-retest reliability, internal consistency, and construct validity (Diefenbach, Tolin, Crocetto, et al., 2005; Stanley et al., 1999). Diefenbach, Tolin, Crocetto, et al. recommended a multi-method approach to TTM assessment, which includes the use of the MGHHPS, Psychiatric Institute TTM Scale (an alternative clinician-rated measure of severity; Winchel, Jones, Molcho, et al., 1992), the CGI, and subjective and objective ratings of hair loss severity. Until the validity, reliability, and sensitivity of TTM measures improve, the evaluation of treatment outcomes and all research on TTM will be fundamentally limited by the extent to which measures can reliably and accurately quantify symptom severity and impairment (McGuire et al., 2012).

These issues aside, meta-analyses have repeatedly shown that psychological treatments for TTM (i.e., various forms of BT/CBT) are more effective than pharmacological treatments, at least immediately following treatment completion (Bloch et al., 2007; McGuire et al., 2014; Slikboer et al., 2015). McGuire et al. (2014) reported that AEBT and DBT-enhanced CBT for TTM (i.e., “mood-enhanced” treatments, p. 78) showed greater effectiveness than standard CBT or HRT, bolstering

suggestions that emotion regulation constructs may be important change mechanisms to target (Keuthen et al., 2012; Woods, Wetterneck, et al., 2006). However, even this conclusion was confounded by the finding that greater level of therapeutic contact, as associated with these mood-enhanced treatments, was an important mediating factor (McGuire et al., 2014). The treatment components responsible for eliciting behaviour change, and the underlying cognitive, affective, and behavioural mechanisms targeted by these treatment strategies, remain to be elucidated in all forms of BT/CBT trialled for TTM.

4.4.2 Theoretical issues: The role of cognitions and beliefs in CBT approaches. An evidence-based, comprehensive, and integrated cognitive behavioural model of TTM does not yet exist. As a result, cognitive behavioural therapies for TTM have been developed and implemented without a strong empirically-derived rationale as to why cognitive change strategies ought to be included. For instance, standard CBT for TTM was proposed on the basis that even behaviours described as automatic (e.g., cigarette smoking, over-eating) can be influenced by maladaptive cognitions (Ottens, 1981), and the suggestion that stress management techniques might also reduce hairpulling (Rothbaum, 1992). A cognitive model of TTM (Gluhoski, 1995) was based upon Beck and colleague's (1993) cognitive model of substance abuse on the basis of perceived phenomenological similarities between the two disorders. However, neither head-to-head clinical comparison studies between TTM and substance/alcohol use disorders nor an empirical evaluation of Gluhoski's (1995) cognitive model of TTM has occurred in the preceding two decades.

A stronger evidence-based rationale was provided for the augmentation of HRT with ACT (Twohig & Woods, 2004; Woods, Wetterneck, et al., 2006) and DBT (Keuthen et al., 2010, 2011, 2012). As reviewed earlier, these treatments emerged on

the basis of repeated findings that experiential avoidance and emotion regulation processes are associated with TTM (e.g., Diefenbach et al., 2002, 2008; Begotka et al., 2004; Norberg et al., 2007). However, an extended behavioural model of TTM incorporating relational frame theory was proposed after the implementation of AEBT and was informed by the results of those trials (Wetterneck & Woods, 2007). This was similarly the case for the emotion regulation model of BFRBs (Roberts et al., 2013). As Roberts et al. (2013) stated, the emotion regulation model of BFRBs remains limited by its omission of the role of core beliefs and personality factors; a limitation that currently applies to all models proposed to account for the onset and maintenance of TTM.

Roberts et al. (2013, p. 760) suggested that "the addition of cognitive factors to psychological models could result in a more comprehensive and complete account of BFRB." They specifically indicated that perfectionism and self-control beliefs are likely to be important cognitive constructs maintaining BFRBs. Evidence for the role of perfectionism in TTM remains limited. In a pooled sample of 24 participants with BFRBs (n = 6 with hairpulling), higher scores on the Frost Multidimensional Perfectionism Scale (FMPS; Frost, Marten, Lahart, & Rosenblat, 1990) were found to correlate with greater emotion dysregulation. This may suggest that perfectionism and emotion dysregulation interact to produce BFRBs, however, levels of perfectionism were not statistically greater in BFRB participants than in HC participants (Roberts et al., 2015). In a sample of 116 participants with self-reported TTM who scored between ≥10 – 26 on the MGHHPS, perfectionism measured by multiple scales, including the FMPS, was found to be statistically greater than when compared to 107 HC participants (Scott & Stevenson, 2015). Additionally, perfectionism was positively correlated with TTM severity. However, replication of these findings in a clinically-diagnosed sample and controlling for comorbid depressive symptomatology is required.

Supporting past research (Diefenbach, Tolin, Hannan, et al., 2005; Stemberger et al., 2000), Scott and Stevenson (2015) also found that TTM severity was associated with lower self-esteem, and that self-esteem was significantly lower for TTM participants than HC participants. Relatedly, shame is also implicated in TTM (for a review, see Weingarden & Renshaw, 2014) and has been identified as a potentially significant treatment-seeking barrier in TTM, SPD, and OCD (Glazier, Wetterneck, Signh, & Williams, 2015). Studies have shown that stigmatising, negative evaluations by others do increase when the source of hair loss is disclosed as TTM in vignette case studies, arguably because self-inflicted hair loss implies to others that the individual with TTM lacks self-control (Marcks et al., 2005; Ricketts et al., 2012). Qualitative data has indicated that women with TTM subjectively report very limited control over their hairpulling and that this limited control may contribute to self-perceptions of being weak, flawed or inept (Casati et al., 2000; Diefenbach, Tolin, Hannan, et al., 2005). Norberg et al. (2007) reported that cognitions relating to shame, fear of negative evaluation by others, and dysfunctional beliefs about appearance were associated with TTM. To date, this appears to be the extent of the research conducted on the role of self regulation and control-related cognitions in TTM.

Given the known associations between perfectionism, self regulation, and control-related beliefs as both maintaining and vulnerability factors in putatively related OCRDs (e.g., Buhlmann, Etcoff, & Wilhelm, 2008; Doron, Kyrios, & Moulding, 2007; Moulding, Kyrios, Doron, & Nedeljkovic, 2009; Phillips, Moulding, Kyrios, Nedeljkovic, & Mancuso, 2011), it is reasonable to suspect that such cognitive constructs, as Roberts et al. (2013) suggested, would be relevant to BFRBs, including TTM.

4.5 Summary and Future Directions

This chapter reviewed the effectiveness of BT/CBT approaches for treating TTM. HRT has a long history as an effective treatment for TTM, but some RCTs (Azrin et al., 1980) have reported greater symptom reductions and longer-term maintenance of gains than others (Keijsers et al., 2006; van Minnen et al., 2003). Explaining these differences, it is plausible that participants in Azrin and colleague's trial experienced symptoms that would not have met diagnostic criteria for TTM (i.e., APA, 1987, 1994, 2000, 2013) and/or had much less severe hairpulling symptoms. Recent research has found that lower TTM severity at the time of initial response to HRT is significantly associated with longer gain maintenance, although lower pre-treatment TTM severity was not (Falkenstein et al., 2014). Alternatively, the original HRT protocol of Azrin et al. (1980), which included 13 distinct treatment components, may have been more comprehensive in targeting relevant behaviour change mechanisms than contemporary HRT protocols, which typically contain three core components; awareness-training/self-monitoring, stimulus control, and competing response training (Franklin & Tolin, 2007; Morris et al., 2013).

High relapse rates following HRT (Keisjers et al., 2006) appear to have prompted the inclusion of various forms of cognitive therapies into BT protocols. Only two RCTs have evaluated the effectiveness of standard CBT, which in addition to HRT, has involved identifying and restructuring maladaptive cognitions and beliefs (Diefenbach et al., 2006; Ninan et al., 2000). While individual CBT is more effective than clomipramine (Ninan et al., 2000), when delivered as a group treatment it is no more effective in the medium- to long-term than supportive group therapy (Diefenbach et al., 2006). Some theorists have suggested that cognitions are unlikely to play a significant role in TTM and that when cognitions are relevant, it is because they are

associated with comorbid disorders (e.g., MDD, OCD) or result from the adverse psychosocial consequences of TTM (Franklin & Tolin, 2007; Mansueto et al., 1997). Augmentation of traditional cognitive therapy strategies (e.g., cognitive restructuring) with BT has occurred prior to systematically investigating the nature and role of cognitions and beliefs in TTM. It may therefore be the case that standard CBT has produced disappointing outcomes because cognitions and beliefs are either (a) not important maintaining factors of TTM symptoms or (b) they are important, but the maladaptive cognitions targeted for restructuring in CBT trials were not the most pertinent cognitions to address in TTM because these have not yet been identified – only hypothesised about (e.g., Gluhoski, 1995; Roberts et al., 2013).

There has been a stronger evidence-based rationale, as reviewed by Roberts et al. (2013), for augmenting BT with ACT (e.g., Woods, Wetterneck, et al., 2006) and DBT (e.g., Keuthen et al., 2012). These therapies support the development of adaptive emotion regulation and distress tolerance skills (Linehan, 1993a, 1993b), and reduce the indivdual's attempts to control or avoid experiencing unpleasant internal states that may be driving hairpulling. These mood-enhanced treatments for TTM have shown greater efficacy than other forms of BT/CBT (McGuire et al., 2014) although the confounding factor of greater therapeutic contact associated with these approaches must be taken into account. Nevertheless, emotion dysregulation and experiential avoidance as potential behaviour change targets is deserving of further investigation. Future studies investigating these factors will need to utilise TTM-specific measures of these emotion-regulation constructs to enhance measurement sensitivity (e.g., Houghton et al., 2014).

Overall, meta-analyses have repeatedly demonstrated that psychological treatments are more effective for reducing self-reported TTM severity than pharmacological treatments (Bloch et al., 2007; McGuire et al., 2014; Slikboer et al.,

2015). However, these meta-analyses have had to include various forms of BT/CBT, which means that there is no clear understanding of which psychological treatments (HRT, CBT, AEBT or DBT-enhanced CBT) are the most effective and why. Each of these treatments is comprised of several distinct treatment strategies and very little research has begun to decipher which components are responsible for eliciting behaviour change specifically in TTM samples (Himle et al., 2004). Several researchers have suggested that component sequencing studies, direct comparisons of standard and third-wave CBT approaches with HRT, and the use of active control conditions ought to be prioritised in future treatment studies (Franklin et al., 2011; Rehm et al., 2015; Slikboer et al., 2015; Woods, Wetterneck, et al., 2006).

Additionally, it is important that research elucidates the cognitive-affective factors that contribute to the onset and maintenance of TTM, as suggested by Roberts et al. (2013). Understanding these factors will contribute to developing a comprehensive, evidence-based, and integrated cognitive behavioural model of TTM that may guide treatment innovation and evaluation. Currently, such a model does not exist for TTM because there is very limited understanding of what, if any, maladaptive cognitions and beliefs influence TTM phenomenology. This thesis will therefore investigate the presence, content, and role of cognitions and beliefs in TTM via the development of a measure of TTM-relevant beliefs, in service of advancing the future of evidence-based cognitive behavioural models and treatments for the disorder.

5. CHAPTER 5 – Integration

5.1 This Thesis

The preceding chapters have reviewed the phenomenology, epidemiology, impact, diagnostic issues, aetiological and conceptual models, and cognitive behavioural treatments of TTM. Throughout the review of this literature, several issues that continue to limit our understanding of TTM have become clear. Specifically: (1) there is a significant paucity of research investigating the nature of dysfunctional cognitions and beliefs in TTM, perhaps in part because behavioural theories and treatments of TTM have dominated the literature for several decades (e.g., Azrin & Nunn, 1973; Mansueto et al., 1997); (2) relatedly, there exists only a single empirical evaluation of the relationship between self-reported TTM severity and cognitions proposed to be of particular relevance to TTM, which was conducted in a self-diagnosed, internet-recruited sample (Norberg et al., 2007); and (3) the fact that there does not currently exist an evidence-based cognitive model of TTM (e.g., Gluhoski, 1995). As a result, there is currently no true cognitive behavioural model of TTM to guide phenomenological, aetiological or treatment research, such that (4) various forms of cognitive behavioural therapies for TTM have emerged – many of which have included traditional cognitive change strategies (Diefenbach et al., 2006; Ninan et al., 2000; Toledo et al., 2014) – but without a strong, empirically-grounded rationale for including such strategies.

This lack of investigation on a potentially important element of TTM phenomenology has influenced the notion that TTM may be best conceptualised as a "motorically focused ('lower-order')" OCRD in contrast to the "cognitively focused ('higher-order')" disorders of OCD and BDD (Phillips et al., 2010, p. 543). Such

simplification imposes the risk that cognitions and beliefs will continue to be understudied, and their role underestimated, in the development and maintenance of TTM. Ultimately, this could lead to a situation in which potentially important behaviour change mechanisms are not identified and therefore not targeted in its treatment. In OCD, identification of non-specific but influential dysfunctional beliefs (e.g., importance/control of thoughts, perfectionism/certainty, responsibility/threat estimation) has been achieved via the systematic development of psychometric measures, such as the Obsessive Beliefs Questionnaire (OBQ; OCCWG, 1997, 2001, 2005). Through this process, the OBQ has greatly supported the evaluation of CBT models and treatments for OCD with a view to advancing our understanding of change mechanisms (e.g., Wilhelm et al., 2015). As established in Chapter 4, the advancement and improvement of cognitive behavioural therapies for TTM depends upon identification of the distinct treatment components that produce the greatest symptom improvements (Franklin et al., 2011; Slikboer et al., 2015). We anticipate that the development of a measure of TTM-related beliefs may support this endeavour, as has similarly been the case with OCD.

The overarching proposition of this thesis, that dysfunctional cognitions and beliefs are associated with TTM, was evaluated in accordance with two aims. The first aim of this thesis was to investigate the nature and role of dysfunctional cognitions and beliefs in TTM to determine if these factors were at all relevant to this disorder. Given the uncertainty surrounding the importance of cognitions in TTM and the resultant paucity of research conducted on this aspect of its phenomenology, qualitative interviews were first conducted in a small, homogenous clinical sample (Chapter 6, Study 1). Eight women with TTM were asked to describe the cognitions, affect, and behaviours that occurred before, during, and after a typical hairpulling episode. Interviews were analysed with the qualitative methodology of interpretative

phenomenological analysis (Smith, 1996). The identified cognitions and beliefs from this preliminary investigation were used to inform the development of a measure of TTM-related beliefs.

The second aim of this thesis was to develop and validate a psychometric measure of TTM-related beliefs, such that their relationship with TTM symptoms (i.e., severity and hairpulling styles) could be examined quantitatively in larger samples. Based on the cognitions and beliefs identified in Study 1, a pool of 50 items was created and administered via an online survey to a large sample ($N = 841$) of participants who either did or did not endorse problematic non-cosmetic hairpulling behaviours (Studies 2 – 3, Chapter 7). The sample was randomly split such that the factor structure of the original 50-item pool could be examined in one half of the sample using exploratory factor analysis (Study 2). Based on exploratory factor analysis, a smaller 13-item measure was developed. Study 2 evaluated the measure's psychometric properties, its relevance to TTM severity and hairpulling styles, and its ability to predict TTM severity while controlling for depressive symptoms. Using the second half of the sample, confirmatory factor analysis (Study 3) was performed to support the reliability of the 13-item factor structure. The measure's psychometric properties, relevance to TTM symptoms, and ability to predict TTM severity while controlling for depressive symptoms, were again analysed.

To establish the clinical relevance of the measure's validity and relationship to TTM samples, the final study (Study 4, Chapter 8) included a clinical sample of adults with TTM ($n = 20$) compared to a community and student sourced control group ($n = 48$). The measure's psychometric properties, relevance to TTM symptoms, and ability to differentiate between TTM and control groups, over and above depression symptoms, were evaluated. Via the creation and validation of this measure across Studies 2 – 4,

quantitative investigation of relationships between TTM symptoms and relevant beliefs meant that further evaluation of the first aim (to investigate the role of dysfunctional cognitions and beliefs in TTM) could be undertaken.

PART II – EMPIRICAL STUDIES OF COGNITIONS AND BELIEFS IN TTM

"There is nothing either good or bad, but thinking makes it so."

William Shakespeare (1564 – 1616)

6. CHAPTER 6 – Study 1: Qualitative Investigation of Cognitions and Beliefs in TTM

6.1 Introduction

As has been established within the preceding chapters, TTM is a highly distressing yet poorly understood disorder. Early clinical conceptualisations of TTM ranged from a nervous habit akin to nail-biting (Azrin, & Nunn, 1973) to an impulse-control disorder akin to pathological gambling (APA, 1987, 1994, 2000). Common to these conceptualisations is the view that the onset and maintenance of hairpulling is largely a result of behavioural and situational factors. The comprehensive behavioural model of TTM (Mansueto et al., 1997, 1999; Stemberger et al., 2003) suggests that hairpulling is reinforced via classical and operant conditioning processes. Given that a substantial proportion of hairpulling occurs beyond the individual's awareness (i.e., automatic hairpulling), this model is particularly suited to behaviourally-oriented interventions such as HRT, which aim to increase the individual's awareness of their actions and surroundings, then modifying those factors to counteract the automaticity of hairpulling. BT has been found more effective than pharmacotherapies (Bloch et al., 2007), and HRT in particular is currently regarded the first-line treatment for TTM (Franklin et al., 2011; Grant & Chamberlain, 2015).

However, HRT does not sustain long-term symptom reduction for the majority of individuals (Keijsers et al., 2006). One explanation for this is that HRT does not target the complete phenomenological picture of the antecedent and maintaining factors that contribute to TTM. Hairpulling that occurs within the individual's awareness (i.e., focused hairpulling) is believed to regulate negative internal experiences such as emotions, cognitions, and sensations (Flessner, Conelea et al., 2008; Flessner, Woods et

al., 2008), and there is growing evidence to suggest that hairpulling does indeed serve an emotion regulation function (for a review, see Roberts et al., 2013). Both ACT (e.g., Woods et al., 2006) and DBT (e.g., Keuthen et al., 2012) have been integrated with BT strategies to address the emotion dysregulation and related processes (e.g., experiential avoidance) that are associated with TTM, and these treatments have been found to significantly decrease acute symptom severity. In a recent meta-analysis, McGuire et al. (2014) reported that these mood-enhanced, third-wave cognitive behavioural therapies resulted in significantly greater post-treatment symptom improvement than did other forms of BT. However, it is necessary to note that this finding may have been confounded by the longer treatment duration of mood-enhanced cognitive behavioural therapies in comparison with other forms of BT.

Like HRT outcomes, the longer-term maintenance of treatment gains has not always been supported for mood-enhanced cognitive behavioural therapies. For instance, while Crosby et al. (2012) reported an 88.9% reduction in hairpulling frequency after eight treatment sessions of ACT-augmented HRT in their five participants, three participants had lost 50% or more of treatment gains at three month follow-up. Summarising the outcomes of eight TTM treatment trials of HRT, standard CBT, and mood-enhanced CBTs conducted between 1996 and 2012, Falkenstein et al. (2014) reported that 50 – 67% of initial treatment responders ultimately experienced relapse by the longest follow-up period.

While behavioural and affective factors are known to maintain TTM symptoms, and have resultantly been incorporated into conceptual models and psychological treatments, far less is known about the role of cognitions and beliefs in TTM. Beliefs about hair qualities and desire for symmetry have been reported anecdotally (Mansueto et al., 1997) or described phenomenologically in non-clinical and student samples

(Duke et al., 2009; Duke, Keeley, Ricketts, et al., 2010). Norberg et al. (2007) discovered that, in an internet-surveyed sample of participants with self-reported TTM (n = 404), TTM severity was positively correlated with shame, dysfunctional beliefs about physical appearance, and fear of negative evaluation. However, the magnitude of these relationships was small, and when controlling for the influence of experiential avoidance, these relationships diminished or disappeared. In another online sample (n = 116), perfectionism was positively correlated with self-reported TTM severity, but this research awaits peer-reviewed publication (Scott & Stevenson, 2015). Finally, Gluhoski (1995) proposed a cognitive model of TTM based upon cognitions relevant to substance abuse; namely, beliefs that the maladaptive behaviour is uncontrollable, valuing the behaviour as a coping strategy, and permission-giving beliefs that facilitate the behaviour. However, this model has not been empirically evaluated.

Roberts et al. (2013) suggested that psychological models of BFRBs, including hairpulling, can be enhanced with the addition of cognitive factors. They suggested that perfectionism and self-control beliefs are likely to be especially relevant to BFRBs. However, as reviewed above and in Chapter 4 (section 4.4.2), the evidence for these particular cognitions in TTM-specific samples remains preliminary. Additionally, some researchers (e.g., Franklin & Tolin, 2007; Mansueto et al., 1997) have suggested that cognitions and beliefs are unlikely to play a prominent role in TTM, and that when cognitions are relevant, it is because they are associated with comorbid disorders (e.g., MDD, OCD) or result from the adverse psychosocial consequences of TTM. Such suggestions are also limited by a lack of empirical support.

As Franklin and Tolin (2007, p. 15) suggest, “the available treatments [for TTM] are only as good as the empirical model upon which they are based.” Indeed, evidence-based incorporation of cognitive factors into CBT protocols for TTM has the potential

to advance treatment efficacy, including longer-term maintenance of treatment gains (e.g., Pélissier & O'Connor, 2004). For this reason, researchers are increasingly calling for systematic research into the cognitions associated with TTM (e.g., Rehm et al., 2015; Roberts et al., 2013; Slikboer et al., 2015); an endeavour that is especially timely, given that TTM has recently been re-conceptualised as an OCRD (APA, 2013) alongside disorders such as OCD and BDD in which cognitive processes are strongly implicated and explicitly targeted during treatment (Frost & Steketee, 2002; Veale, & Neziroglu, 2010).

The aim of this study was therefore to investigate the presence and content of dysfunctional cognitions and beliefs experienced by individuals with TTM, and how these cognitions act as antecedent and/or maintaining factors across the hairpulling cycle.

6.2 Method

6.2.1 Design. This study employed a qualitative research design, in which interpretative phenomenological analysis (IPA: Smith, 1996; Smith & Osborn, 2008) was used to analyse and interpret participants' interview data. IPA is committed to making a detailed and multifaceted examination of how a relatively homogeneous, small group of individuals (i.e., < 10 participants) perceive, appraise and "make sense" of the phenomenon under question. In this sense, IPA is a phenomenological approach, which makes cognition its central analytic concern, and was therefore suited to the aims of this study as an investigation of cognitions and beliefs in TTM. However, IPA is also interpretative in that psychological concepts and theory may be drawn upon by the researchers to make sense of participant experiences. IPA emphasises theoretical as opposed to empirical generalisability (Smith & Osborn, 2008).

6.2.2 Participants. Eligibility criteria included being: (1) diagnosed with TTM (*DSM-IV-TR*[1]; APA, 2000) at the clinical interview; (2) aged 18 years or older; (3) willing and available to participate in an electronically recorded clinical and qualitative interview; and (4) proficient in speaking English. Participants were ineligible if they experienced current high suicide risk or reported lifetime or current psychotic illness. Participants were recruited through advertisements to national mental health organisations and online peer support forums (Appendix C). Between February and October of 2012, 12 individuals (all female) contacted the researchers about participating, of whom eight consented to participate. No participants were excluded on the basis of exclusion criteria. The majority of participants (n = 5) were recruited from the Anxiety Recovery Centre of Victoria's TTM peer support group.

Participants' ages ranged from 23 to 36 (M = 29.88, SD = 5.05). Demographics are summarised in Table 6.1. All participants were unmarried and had completed higher education, in contrast with characteristics of other TTM samples with greater variability in relationship status and educational achievement (e.g., Christenson, Mackenzie, et al., 1991; Woods, Flessner, et al., 2006). Consistent with other samples, most participants (n = 5) experienced comorbid depressive psychopathology.

[1]It should be noted that although symptoms were assessed according to *DSM-IV-TR* criteria, all participants' symptoms would have met diagnosis of *DSM-5* TTM (APA, 2013).

Table 6.1

Participant Demographics

ID	Age	Nationality	Educational Attainment	Relationship Status	Employment Status	Pulling Sites	MINI diagnoses
1	35	United Kingdom	Postgraduate degree	Single	Full-time	Scalp, eyelashes	Manic Episode – past
2	30	Australia	TAFE qualification	Single	Full-time	Scalp, eyelashes, eyebrows, legs	No diagnosis
3	24	United Kingdom	Undergraduate degree	De-facto	Full-time	Eyebrows	PDA, GAD
4	31	Australia	Postgraduate degree	De-facto	Part-time	Scalp	Dysthymic Disorder, Alcohol Abuse
5	36	Asia	Undergraduate degree	Single	Unemployed	Scalp, eyebrows	MDE– current
6	26	Europe	Undergraduate degree	Single	Unemployed	Eyebrows	MDE– current
7	23	Australia	TAFE qualification	Single	Unemployed	Eyebrows, eyelashes	MDD– recurrent
8	34	Australia	Undergraduate degree	Single	Full-time	Scalp, legs	MDE– current, GAD

Note. GAD = generalised anxiety disorder; MDE = major depressive episode; MDD = major depressive disorder; PDA = panic disorder with agoraphobia. *DSM-IV-TR* criteria (APA, 2000).

6.2.3. Measures. Several clinician- and self-rated measures of TTM symptoms and severity were utilised in accordance with recommendations that a multi-method approach improves assessment validity (Diefenbach, Tolin, Crocetto, et al., 2005; McGuire et al., 2012).

The *Minnesota Trichotillomania Assessment Inventory – II* (MTAI-II; Christenson, Mackenzie, et al., 1991; Appendix D) is a comprehensive, structured diagnostic interview that assesses TTM according to *DSM-IV-TR* (APA, 2000) criteria. As with other diagnostic interviews developed specifically to assess TTM, the psychometric properties of the MTAI-II have not been evaluated. However, as it is the only diagnostic interview that also gathers descriptive information about hairpulling symptoms (Diefenbach et al., 2000), the MTAI-II was deemed the most suitable interview schedule for the purposes of this qualitative study.

The *Psychiatric Institute Trichotillomania Scale* (PITS; Winchel, Jones, Molcho, et al., 1992; Appendix E) is a 6-item clinician-rated measure that assesses the severity of TTM symptoms over the past week. Items are rated on an 8-point Likert scale, where higher numbers reflect greater severity. The PITS total score has demonstrated high inter-rater agreement (r = .93). It has also been shown to moderately correlate with other clinician-rated and self-report measures of TTM severity (Diefenbach, Tolin, Crocetto, et al., 2005).

The *Yale-Brown Obsessive-Compulsive Scale: Trichotillomania version* (YBOCS:TM; Stanley, Prather, Wagner, Davis, & Swann, 1993; Appendix F) is a 10-item clinician-rated measure that assesses TTM symptom severity across two subscales; (1) thoughts related to hairpulling and (2) hairpulling behaviour. Each item is rated on a 5-point Likert scale, where higher numbers reflect greater severity. Inter-rater

agreement is high (r = .70 – 1.0) and internal consistency is acceptable (α = .70) (Stanley et al., 1993).

The *Massachusetts General Hospital Hair Pulling Scale* (MGHHPS; Keuthen et al., 1995; O'Sullivan et al., 2005; Appendix G) is a 7-item self-report measure that assesses the severity of TTM symptoms over the past week, including the frequency and intensity of urges and distress associated with hairpulling. Each item is rated on a 5-point Likert scale, where higher numbers indicate greater severity. A total score is achieved by summing all item scores. The MGHHPS has been found to have good internal consistency (α = .80) (Diefenbach, Tolin, Crocetto, et al., 2005).

The *Mini-International Neuropsychiatric Interview- version 5* (MINI; Lecrubier et al., 1997; Sheehan et al., 1997, 1998) is a brief, structured diagnostic interview designed to screen for 17 Axis I mental disorders according to *DSM-IV* criteria (APA, 2000). The MINI has been found to correlate with other popular diagnostic interviews of greater administration length (Lecrubrier et al., 1997; Sheehan et al., 1997), and has demonstrated excellent inter-rater reliability (Sheehan et al., 1998).

The *Obsessive-Compulsive Inventory – Revised* (OCI-R; Foa et al., 2002; Appendix H) is an 18-item self-report measure of OCD symptoms experienced in the past month. The OCI-R has been found to effectively discriminate between patients with OCD and other anxiety disorders (Foa et al., 2002). The current study utilised a total cut-off score of 18, in line with Foa and colleague's determination that this score produced optimal sensitivity (74%) and specificity (75.2%) among samples with a higher base-rate prevalence of OCD.

The *Obsessional Beliefs Questionnaire – Revised* (OBQ-44; OCCWG, 1997, 2001, 2005; Appendix I) is a self-report scale that measures beliefs associated with

OCD across three subscales: (1) responsibility/threat (RT), (2) perfectionism/certainty (PC), and (3) importance/control of thoughts (ICT). The OBQ-44 has demonstrated high internal consistency (range of α = .89 – .95; OCCWG, 2005) and strong correlations with other OCD symptom measures (OCCWG, 2005; Tolin, Worhunsky, & Maltby, 2006).

The *Brown Assessment of Beliefs Scale* (BABS; Eisen et al., 1998; Appendix J) is a 7-item clinician-rated scale that measures the degree of conviction and insight one has into their primary obsession or delusional belief over the past week. Eisen et al. (1998) reported good convergent validity as compared to other measures of delusionality among samples with OCD, BDD, and mood disorder with psychotic features. The current study utilised a total cut-off score of 18 combined with a score of four on item 1, consistent with Eisen and colleague's finding that this correctly identified 90% of cases with delusional beliefs.

The *Quality of Life Enjoyment and Satisfaction Questionnaire – Short Form* (Q-LES-Q-SF; Stevanovic, 2011; Appendix K) is a 16-item self-report measure that assesses quality of life enjoyment and satisfaction across the domains of physical health, leisure, subjective feelings, social relationships, and general life satisfaction. The Q-LES-Q-SF has demonstrated excellent test-retest reliability (r = .93) and internal consistency (α = .90) in clinical samples (Stevanovic, 2011).

A semi-structured qualitative interview was developed by the authors to explore participants' experiences before, during, and after hairpulling episodes (refer to Appendix L). The interview script was developed by the research student, and revised by a researcher with expertise in qualitative methodology, including IPA (co-supervisor), and a clinical psychologist with clinical and research expertise in OCRDs

(primary supervisor). Revisions to the interview script included reducing the number of questions and prompts, and improving the clarity of question phrasing. As per the qualitative approach of IPA (Smith, 1996; Smith & Osborn, 2008), a small set of standard questions and prompts were used, and inquired about: (1) the context in which hairpulling occurs; (2) the experience of urges; (3) associated physical sensations; (4) associated affect, thoughts, and behaviours; and (5) the participant's reflections on the function of hairpulling. Participants were encouraged to consider the beliefs, explanations, and meaning they attributed to each element of the hairpulling process.

6.2.4 Procedure. Consenting participants (Appendix M) completed a battery of surveys (MGHHPS, OBQ-44, OCI-R, Q-LES-Q) prior to participating in electronically-recorded clinical and qualitative interviews. At the clinical interview, participants were administered the PITS, YBOCS:TM, BABS, MTAI-II, and MINI. Clinical interviews were administered by a trained provisional psychologist (research student) under the supervision of a clinical psychologist (primary supervisor). Participants then engaged in the qualitative interview. Total participation time was approximately 150 minutes. The study protocol was approved by Swinburne University Human Research Ethics Committee (Appendix N).

6.2.5 Analysis. Recorded qualitative interviews were transcribed verbatim and analysed according to the qualitative methodology of IPA (Smith, 1996; Smith, & Osborn, 2008). Complete and detailed idiographic analysis of each participant's transcript occurred before moving onto the next participant. The process commenced with each transcript being read several times and detailed notes made on the side of the transcript regarding significant points expressed by the participant. These notes were then further developed to incorporate psychological concepts (i.e., interpreted) in a separate table. Upon completing this process separately for each participant, several

themes connected across participants were identified. A new table was created to collect these superordinate themes, and was elaborated by subthemes identified within and across participants' individual transcripts. Following credibility guidelines for qualitative research (Elliott, Fischer, & Rennie, 1999), clean interview transcripts and the table of superordinate and subordinate themes were supplied to a researcher (co-supervisor) who has expertise in behavioural addictions and qualitative methodology. This allowed for themes to be checked against the transcripts for their perceived relevance, importance, prevalence, and interpretation. After discussion between the research student and co-supervisor, themes were discarded if they had low prevalence (i.e., featured only once or twice) within transcripts, were not supported by rich evidence (i.e., not discussed in-depth), or could be subsumed under other themes. Contrasting opinions were resolved with the input of a clinical psychologist (primary supervisor), who has research and clinical expertise in OCRDs, after review of clean transcripts.

6.3 Results

6.3.1 Sample characteristics. On average, participants reported moderately severe TTM symptoms as measured by the MGHHPS (Keuthen et al., 1995) and PITS (Winchel, Jones, Molcho, et al., 1992), and moderately severe functional impact due to TTM-related thoughts and behaviours as measured by the YBOCS:TM (Stanley et al., 1993) (Table 6.2). Hairpulling styles were assessed according to the MTAI-II (Christenson, Mackenzie, et al., 1991), whereby participants were asked "considering the last three months would you say that your attention or thoughts have been primarily focused on hair pulling […] or have you found hair pulling to be more automatic, as if you are partially aware or not at all aware of what you are doing?" Six participants reported that their primary hairpulling style was automatic, with on average 88.2% of

their hairpulling episodes being automatic (range = 80 – 99%). For the two remaining participants, one (P3) reported that her hairpulling episodes were 50% focused, and the other (P7) reported that her primary hairpulling style was 70% focused. On average, participants began hairpulling at age 15.13 (*SD* = 4.70), and experienced an estimated average of 6.13 months (*SD* = 7.51) symptom-free since disorder onset. Participants estimated engaging in an average of 18.25 separate hairpulling episodes (*SD* = 12.36) per week over the past three months, each lasting an average of 51.25 minutes (*SD* = 43.98). Of the eight participants, seven reported that they had sought treatment for TTM from a mental health professional at least once in their lifetime and reported that treatment yielded no symptom improvement. On average, these participants had reportedly accessed two types of treatment (range = 1 – 4), which included: CBT (*n* = 4); pharmacotherapy (*n* = 3); hypnotherapy (*n* = 3); supportive psychotherapy (*n* = 2); attending support groups (*n* = 2); acupuncture (*n* = 1); and reiki (*n* = 1).

Table 6.2

Means and Standard Deviations for Quantitative Measures of OCRD Phenomena

Measure	*M*	*SD*
TTM Symptoms		
MGHHPS total	16.38	6.07
PITS total	26.75	3.88
YBOCS:TM total	19.63	6.67
OCD Symptoms		
OCI-R total	22.50	7.11
OCRD Beliefs		
OBQ-44 RT subtotal	62.88	20.35
OBQ-44 PC subtotal	67.13	26.24
OBQ-44 ICT subtotal	38.13	16.91
BABS total	10.63	3.50
Quality of Life		
Q-LES-Q-SF percentage maximum	52.25 (%)	20.52

Note. *M* = mean; *SD* = standard deviation; MGHHPS = Massachusetts General Hospital Hair Pulling Scale; PITS = Psychiatric Institutes Trichotillomania Scale; YBOCS:TM = Yale-Brown Obsessive-Compulsive Scale: Trichotillomania version; OCI-R = Obsessive-Compulsive Inventory-Revised; OBQ-44 = Obsessive Beliefs Questionnaire-44 items; OBQ-44 RT = Responsibility/Threat; OBQ-44 PC = Perfectionism/Certainty; OBQ-44 ICT = Importance/Control of Thoughts; BABS = Brown Assessment of Beliefs Scale; Q-LES-Q-SF = Quality of Life Enjoyment and Satisfaction Questionnaire-Short Form.

On average, the sample experienced clinically significant symptoms of OCD (Foa et al., 2002), as measured by the OCI-R. Six of the eight participants achieved a total OCI-R score of 21 or more, indicating the presence of clinically significant obsessive-compulsive symptomatology. The sample's mean scores on the OBQ-44 subscales revealed similar levels of obsessive-compulsive beliefs as elsewhere reported by a sample of participants with OCD (OCCWG, 2005); RT (M = 64.5, SD = 22.4), PC (M = 69.9, SD = 22.1), and ICT (M = 39.8, SD = 16.3). No participants of the current study cited beliefs about their hairpulling that met Eisen and colleague's (1998) criteria for pathological delusions. Finally, participants reported living at 52.25% of their maximum quality of life on average, as measured by the Q-LES-Q-SF (Stevanovic, 2011). This clinical profile is comparable with that of other TTM samples (e.g., Christenson, Mackenzie, et al., 1991; Woods, Flessner et al., 2006).

6.3.2 Qualitative results. Six superordinate themes reflective of influential beliefs and cognitions across the hairpulling cycle were identified (Table 6.3). These cognitions played antecedent and maintaining roles at different points before, during, and after hairpulling episodes.

Table 6.3

Superordinate and Subordinate Themes Identified with IPA

Superordinate Theme	Subordinate Theme
Negative Self-Beliefs	
	Worthless Self
	Self as Abnormal
Control Beliefs	
	The Importance of Control
	Ambivalent Choice
	Loss of Control
Coping Beliefs	
	Low Coping Efficacy
	Experiential Avoidance
	Criteria for Effective Coping
Beliefs about Negative Emotion	
	Tolerability
	Acceptability
Permission-Giving Cognitions	
	Justification
	All-or-Nothing Cognitions
	Reward
Perfectionistic Standards (for Hair Quality)	
	Just Right Standards
	Mastery through Perfection

6.3.2.1 Negative self-beliefs. All participants reported experiencing negative self-beliefs at some point during a typical hairpulling episode. Participants offered varying descriptions of the directional relationship between self-beliefs and TTM symptoms. For example, participant 5 attributed her development of TTM directly to "insecurity and self-esteem issues – a large part of it stems from that", and concluded that "once a hairpuller loves themselves I think they're less likely to want to resort to hairpulling." By contrast, participant 7 explained that having TTM "makes me worry about myself." For this participant, TTM provided a valid reason to have concern for her own wellbeing where she did not feel entitled to such self-concern otherwise. Two strong subthemes underlying these negative self-beliefs were identified; worthless self and abnormal self.

6.3.2.1.1 Worthless self. Cognitions regarding participants' perceived lack of self-worth took on a variety of forms. At its most extreme this included a chronic sense of worthlessness encompassing the belief that one's own needs are burdensome. This was the experience of participant 7, as previously described. She reported that her hairpulling episodes typically commenced upon engaging in anxious rumination about "worthlessness and not having a job, and feeling a bit useless to the community". Participant 4 described how her hairpulling episodes were often triggered by a similar pattern of anxious rumination, reflecting her perceived low self-efficacy;

> I guess the things that happen are that I don't know what to do in the situation or um…I don't feel that I can get out of the situation or change the situation how I'd like it to be changed, or um…kind of feeling a bit helpless and frustrated and annoyed about something. (P4)

Participants described how their negative self-beliefs dissipated as their hairpulling intensified because their attention was drawn solely onto the process of selecting, analysing, plucking, and manipulating hair strands. However, beliefs of worthlessness returned once the intensity of the hairpulling urges waned. Participants reported "guilt" (P6) and "embarrassment" (P8) associated with their behaviour;

> I feel crap, what a waste of time, what a waste of the hair that I pulled out that wasn't the 'imperfect hair', that was stupid, and [I] actually feel pretty crap. (P8)

> It makes me feel regret and sadness that I've done this to myself. […] It makes me feel, in a way, less worthy as a person because I've done this, you know – that I couldn't find a better way to deal with my problems. (P5)

6.3.2.1.2 Self as abnormal. For many participants, hairpulling contributed to their sense of self as being abnormal through two processes. First, having the disorder, TTM, was perceived by several participants to indicate that they were fundamentally flawed or defective;

> I feel like it's the kind of thing that, you know, 100 years ago people would've been locked up for. I feel like it's mental. […] It was actually when I got here [from the UK to Australia] and one time I was staying with my friend and I was doing it [hairpulling] for an hour, and I was like, 'I've got to sort it out, I've got to sort it out, I've got to sort it out, I'm on the other side of the world, this is the perfect opportunity to sort this out'. (P3)

After completing her participation in the present study, participant 7 later wrote to the researchers;

> I've always dreamed of having a nice little family of my own [….] but with trich it makes me feel crazy if I even think about it, because my brain knows no one could ever love someone with a hair pulling syndrome.

Second, the quality of one's hair was taken to be reflective of one's personal qualities. Given that all participants had reported having caused permanent physical damage to their hair over years of repeated pulling, those who related their sense of self to their hair quality As a result described themselves as damaged or impaired;

> I wanna pride myself on my hair and I wanna have nice, beautiful hair, you know. Most girls do. So yeah, it sort of makes – it lowers my self-esteem, you know, so yeah. Of course you want your family to like your hair but my family don't like my hair. (P5)

> It stops me from participating in the majority of things of life that I would like to, down to going for a new job interview because I can't even put my hair nicely and wear something nice. (P8)

For one participant in particular, her sense of self was intricately connected to the state of her eyebrows. Through the absence of eyebrow hair, this woman was able to keep hidden a self that she perceived to be fundamentally unacceptable;

> I guess that I've known myself without my brows and whatever for so long that, um, yeah, I, it's just a whole new person you have to look at and, um, when I grew them back for three months a few years ago I wasn't a mean person but, sort of, I felt free more to judge people on just whatever, whereas now I try and accept absolutely everything just 'cause I'm worse, I feel worse than them. (P7)

6.3.2.2 Control beliefs. All participants identified control as an issue – particularly, the meaning of control, and the way in which control was achieved, relinquished or reinstated via the act of hairpulling.

6.3.2.2.1 The importance of control. Several participants described engaging in rumination prior to the onset of a hairpulling episode that reflected the importance of obtaining control over one's thoughts, emotions, actions and life situations. Descriptions of this worried rumination repeatedly included a fear of change, thereby implicating a perceived need for control;

> If there is something that is kind of frustrating or annoying, the fact that you can't change it makes you stressed – me stressed – and then, um, I take the stress out on my hair. (P4)

> I think that I, I must use it as a mechanism to help me cope with other things that aren't going right in my life, so I turn to that [hairpulling] to try and control those things. I, if I don't have control over those bad things, I'll do this [pull] and I have control over this. (P8)

This fear of change, and its implications for feeling out of control, appeared to be rectified for most participants by engaging in hairpulling. There were several ways in which hairpulling served this purpose. For instance, participant 4 explained that "being a routine behaviour [hairpulling] is calming" because "I don't need anyone else or thing to do it." Hairpulling offered her a sense of self-sufficiency and predictability. Others described how hairpulling altered their experience of negative emotions associated with threats to control (see section 6.3.2.4 Beliefs about Negative Emotion). This was achieved by diminishing those emotions (e.g., "control, calm down, or release", P1; "I have control over this and it gives me some form of relief", P8), or by replacing them

with more satisfying ones (e.g., “joy and pleasure”, P4; “excitement”, P8; “energising”, P3).

The actions involved in hairpulling, such as procuring hair strands with a particular physical quality and manipulating those strands once acquired, was also experienced as a re-claimed sense of control, or “success and achievement” (P4);

> Twisting it around, I think, is more just like a victory thing. (P3)
>
> I keep saying to myself ‘you got a good hair’, like it’s almost […] congratulatory. (P8)

Similarly, participant 3 explained that she had mastered the ability to cease pulling in “the middle” of a hairpulling episode, which she perceived to be an indication of her self-control; “that would be a real achievement, possibly more than not doing it [commencing hairpulling] in the first place.” She reflected, “that’s kind of the ultimate control.” Ultimately, hairpulling was described by all participants to re-instate a highly valued sense of control by generating a “space that I can create and count on.” (P4)

6.3.2.2.2 Ambivalent choice. Participants frequently described the process of commencing, continuing and ending a hairpulling episode as a result of negotiating a series of decision-points. The language participants utilised in their descriptions was action-focused and reflected that at each stage of a hairpulling episode there was a choice to be made;

> Prior to commencing a hairpulling episode: “I can either decide to leave it or see if I have time or energy, and then I just pull some out.” (P7); “I dare you to do it and then not, and then stop.” (P3)
>
> Once hairpulling had commenced: “I don’t stop myself from doing it.” (P5)

During a hairpulling episode: “You know you should stop but you just don’t want to, you just want to keep going.” (P4)

Toward the end of a hairpulling episode: “If I’ve had enough relief I will physically stop myself.” (P5); “I would like to stop it myself, unless I’m too lazy.” (P6)

On reflection at the end of a hairpulling episode: “I wasn’t gonna let that happen again for so long, or at all.” (P3)

However, interspersed with these decision-points, participants simultaneously reflected their perceived lack of choice over their actions;

I think it’s more automatic. Yeah, just like a reflex. (P7)

They [urges] kind of take a hold of you, and in a way you’re kind of like, possessed. (P5)

It’s a bit like, it’s just completely hand-to-eyebrows like there’s a rope or something between hand and eyebrow. It doesn’t really involve anything else. (P3)

It does its own thing and I can’t control it. (P1)

During her interview, one woman became acutely aware of her ambivalent attitudes regarding the role of choice and control in hairpulling episodes;

I want to say they’re my choices because I’m an adult, so I should be able to make my own decisions, but that decision [to pull] is not one that I am consciously aware of making. It happens, it’s done, and I didn’t know that I’d been doing, been pulling my hair. (P8)

6.3.2.2.3 Loss of control. All participants, like participant 8 above, described experiencing a disconnection from themselves and their true values, motivations and goals through a state of diminished awareness. Some participants described this experience as an "other reality" (P4 and P2), which contrasted with "the normal, conscious frame of mind" (e.g., P4, P7, and P8). Participant 7 reflected, "maybe if my mind was on the pulling I would stop". It was during this dissociative-like state that all participants described losing control over their cognition and behaviour. This loss of control was typically described in a way that reflected participants' sense of defeat and resignation;

> In a real, um, involved episode then that can pretty much be 'it', and it would almost be a sense of resigning myself to, 'I'm just going to do it until I stop' because I just feel so powerless to do anything about it. The only thing I can do is do it – do the damage – and then once there's nothing left then I'll stop. Kind of just submitting myself to what's going to happen. (P1)

> Just think to myself, 'wish it goes away some day', and that's it. (P6)

> Oh well, that's just, it's just part of life. (P2)

Moreover, to retain or regain one's sense of awareness and control during a hairpulling episode was perceived by several participants to require a strength of will-power deemed almost unattainable;

> If I were able to overcome this hairpulling I would feel like I could overcome anything, really. […] I would feel like a better person, I could help the world. (P5)

> You can pull one out but it takes a lot of courage to stop there. (P7)

> I can't find the strength. (P6)

Beliefs that served the overvaluation of the importance of control; a sense of ambivalence as to the level of choice in one's own actions; and the appraisal of loss of control representing defeat in the face of unattainable self-expectations, seemed to combine in an overall sense of powerlessness over hairpulling behaviour.

6.3.2.3 Coping beliefs. When asked about the purpose of their hairpulling, all eight participants responded that it functioned as a coping strategy for distress and was frequently likened to abuse of drugs or alcohol, or overeating. Three beliefs were found to underlie the reinforcement of hairpulling as a coping strategy; low coping efficacy, experiential avoidance, and ideas underpinning what makes a coping strategy effective.

6.3.2.3.1 Low coping efficacy. Several participants purported to have very poor distress tolerance skills. These reports reflected limited coping strategies to draw upon in times of stress and low self-efficacy regarding their overall coping ability;

> I can't deal with it, I can't deal with that emotion. It's [hairpulling] my first response in me being able to, in a way, deal with it, but of course not in an appropriate way but I don't know any other way of dealing with it [distress]. (P5)

> I don't know how to cope with life, and it gets me emotional and anxious, and I guess I turn to this [hairpulling]. It doesn't work but it's what, I guess, turn to. (P8)

The knowledge that one's primary coping strategy (i.e., hairpulling) was "ultimately […] not fixing it in the long term" (P1) appeared to compound participants' low self-efficacy for their coping abilities.

6.3.2.3.2 Experiential avoidance. After commencement of a hairpulling episode the individual typically moved into a dissociative-like state that was often referred to as "the trich-trance frame of mind" (P4);

> I completely zone out once I'm actually in the moment, yeah. So there's no thought processes, um, you don't even recognise anything really going on around you at all. Even if the shower was dripping, I wouldn't even notice it even though that would normally be something that would irritate me. I wouldn't even notice it. (P2)

The primary goal of hairpulling as a coping strategy was to distract from, minimise or avoid the experience of negative internal experiences, particularly anxiety and its associated physical symptoms; "It is […] almost like a sedative." (P2) Participants also repeatedly described the way hairpulling helped to distract from worried rumination;

> It's almost a break from thinking about anything else. (P1)

> I almost think that it's so I don't focus on what I don't like in my life. (P8)

Similarly, one participant likened her adolescent experiences of deliberate self-harm to the experience of pulling her eyelashes;

> That real focus on a sort of physical sensation, um, kind of pushes out emotional sensations so you can only focus on that. And that's kind of easier to deal with than thoughts about emotional things. (P2)

6.3.2.3.3 Criteria for effective coping. Implicit in participants' statements about coping with negative internal experiences were several criteria for what makes a coping strategy effective. As reviewed above, the goal of hairpulling was to facilitate

experiential avoidance. Therefore, hairpulling was viewed as an effective coping strategy because it achieved this goal with automaticity and self-sufficiency;

> It's comfortable because it's familiar. So, um, what makes it familiar or comfortable? Just, um, I guess it's because it's something I can do, um, kind of alone. I don't need anyone else or thing to do it. […] you could be sort of self-sufficient 'cause you can just do it alone. Um, and it's familiar just because it's something that you've been doing for so long, um, that I've been doing since I was 12. So, nearly 20 years, so it's like a, it's like a familiar habit or activity of something that you know you can do. (P4)

This sentiment was repeated when participants explained how difficult it was to stop hairpulling;

> I would like to stop it myself, unless I'm too lazy. I read about keeping a diary or something, like, I haven't really looked into it, like how to prevent it [pulling] or change. I know you can change your environment or behaviour but I'm not really […] dedicated. (P6)

> If you don't do it [pull] now it'll be alright in a few months, but it's so hard to try every day [to stop]. It's a bit draining. (P1)

Overall, participants preferred hairpulling as a coping strategy because it provided reliable, immediate, accessible and easily attained short-term relief from negative internal experiences, while supporting a sense of self-sufficiency.

6.3.2.4 Beliefs about negative emotion. At every stage of the hairpulling cycle, emotions were appraised as either "good" or "bad". Negative emotion was further

appraised by participants as intolerable and/or unacceptable. Hence, these appraisals were intricately connected to the aforementioned coping beliefs.

6.3.2.4.1 Tolerability. Participants repeatedly identified that anxiety, frustration and anger typically triggered the onset and/or maintenance of a hairpulling episode;

> The first reason to pull will be stress. (P2)

> I do it [pull] as a response to feeling frustrated and anxious. (P3)

> I do think about the problems, I do think about the hurt and I do think about the anger and resentment as I'm pulling out my hair. And the more intense the feelings I have when I'm thinking about it, the harder I pull. (P5)

Participants less frequently identified boredom and guilt as triggering or maintaining hairpulling;

> […] underlying boredom or restlessness, and then the hairpulling acts as a stimulus for that. (P2)

> I guess it helps me, I don't know – not feel normal, but stop feeling guilty, maybe. (P7)

Although few participants directly stated that they found these emotional states difficult to tolerate, this was implied by participants' descriptions of how they responded to them;

> Researcher: "What are some of the physical sensations that you're having just before you begin hairpulling?"

Participant 8: “I think you’re a bit racy, I think you’re a bit, um, anxious. Um, there’s a sense of urgency, a sense of quick [the participant began snapping her fingers] and irritability.”

Researcher: “Have you ever been able to not pull in response to that anxiety, and that sense of urgency?”

Participant 8: “I don’t think so. I might have been able to delay it by saying ‘you don’t really want to do this, come on, you don’t want to do this’. And then you do it.”

This participant found it difficult to experience anxiety for more than a few moments before feeling compelled to relieve it by hairpulling. Several participants espoused similar sentiments;

You’re also thinking about how bad you are. I guess it, um, I guess that’s a feeling you want away, so you want to pull and take that feeling away. (P7)

6.3.2.4.2 Acceptability. As with participants’ beliefs about how much they can tolerate emotions such as anxiety, frustration and anger, few explicitly articulated the belief that these emotions were appraised as unacceptable to experience. However, beliefs regarding the acceptability of these emotions appeared to underpin participants’ low tolerance for them. Repeatedly, participants referred to the aforementioned emotional experiences as bad;

I guess just, thinking about the bad emotions that come out when you pull it [hair] out […] and then […] your anger’s gone at whoever I was angry at. (P7)

Rising tension, kind of too much energy just needs to come out. But not good energy, bad energy. (P2)

Thus, labelling these emotional experiences as bad was taken to imply their inherent unacceptability. Moreover, for some participants the only appropriate way to express such emotion was through the physical representation that hairpulling afforded;

> I do like to have a physical response to feeling frustrated and anxious, like proof almost. Gives, like, a physical representation of how anxious I am at the time, so it's more tangible. (P3)

> I take the stress out on my hair. […] it's when you feel a lot of emotion and you need to channel them onto something or somewhere. (P2)

For these participants, the physical expression of negative emotions via hairpulling was more acceptable than acknowledging or accepting such emotions in the first instance.

6.3.2.5 Permission-giving cognitions. Most participants described thoughts that elicited their permission to commence, continue or resume hairpulling; "You might try bargaining with yourself and say, 'okay, you can pull just one hair', so you do that and then you say, 'oh well, I'll just pull one more.'" (P8) Three subthemes were identified to comprise these permission-giving thoughts; justification (of pulling), all-or-nothing beliefs, and reward.

6.3.2.5.1 Justification. Prior to commencement of a hairpulling episode, some participants appeared to engage in a ruminative thought process associated with the urge to pull. One participant described that her hairpulling episodes typically occurred within the context of checking that bald patches of scalp hair were still well-disguised by her hair style;

> Researcher: "So for you, what does an urge feel like?"

> Participant 1: "Um, well, it is almost like there is no urge and it's just that I'm doing it and can't stop doing it. And there's almost a comfort in just checking how it (area of hair loss) feels and, and making, trying to make it better. 'Cause I have this thing that once I've fixed it I won't need to do it [check] anymore."
>
> Researcher: "Okay, so how do you – how does it happen that you start touching to see that it's, you know, okay?"
>
> Participant 1: "Yeah, it's exactly like that. And I don't know, maybe I'm telling myself I'm just checking to see that the hair is still covering up the bald patch but it's almost like, in checking that it's still okay, that triggers off the urge [to pull]."

For this participant, the act of checking the concealment of her hair loss served to justify commencing an action that was highly likely to trigger the onset of hairpulling urges and behaviours.

Other participants similarly described various "excuses" (P7 and P3), "reasons" (P2) and ways to "bargain with yourself" (P8) that occurred when justifying the commencement of hairpulling. One participant explained that she often justified pulling a single eyebrow hair to "test" her ability to refrain from pulling out more hairs, despite knowing that this was highly likely to elicit hairpulling urges and behaviours;

> I can just do it [pull] and then stop doing it rather than not even start doing it, that's even more – if I can do that then there's really no problem. But what it also does is give me an excuse to do it [pull]. (P3)

6.3.2.5.2 All-or-nothing cognitions. Participants volunteered several thoughts that they had before, during and after hairpulling episodes that permitted them to pull hair, which were reflective of an underlying all-or-nothing mentality;

> Thinking that it's going to allow me to not do it for the rest of the evening, which it doesn't, but thinking in that moment, thinking like, it's unfortunately just something I have to do. (P3)

Many participants believed that because their hairpulling had become habitual there was little use in attempting to stop once a hairpulling episode had commenced;

> Like I say, every day I think 'that's it' and I genuinely think I won't do it again 'cause, like, now, why would I do it? It seems like such a bizarre thing to do but almost certainly in the next few days I'll do it again. (P1)

The belief that hairpulling episodes could not be avoided was also associated with the belief that once commenced, a hairpulling episode should be completed to its fullest extent;

> […] when you've been at it for two hours or something and, and let's say there's just 20 [eyelashes] left and you start with 100 and you just think, 'I've just messed up so badly, I might as well go back to the start'. (P7)

6.3.2.5.3 Reward. Several participants described the way selecting and pulling out target hairs provided a sense of pleasure and gratification despite its negative consequences;

> Participant 2: "It just feels like an addiction, like a – something that you probably know you should stop but you just don't want to, you just want to keep

> going. So, you know that really, what you're doing is being destructive but there is some pleasure in doing it."
>
> Researcher: "And is that the reason why, despite knowing it's bad, you just want to keep going because it's […] pleasurable?"
>
> Participant 2: "Yeah, there is that pleasure of, um, looking at the hair that you want and finding it, and touching it, and playing with it, that all – that the sensory parts of it are pleasurable."

This participant further explained that she often selected target hairs of a certain tactile quality based upon the different kind of emotional reward she was seeking. This participant, and others, described an escalating sense of urgency to achieve gratification as the hairpulling episode continued;

> But then there's the, 'oh, I knew that one [hair strand] was going to be bad anyway, but I just felt like doing it anyway' feeling. Kind of like, each one that you do [pull] that was not the one you're looking for will get you closer to the one you were looking for. It'll lead you to – you'll get closer to getting the good one. (P2)
>
> You don't think about the consequences. You only think about the consequences after you do it but in that moment all you can think about is just getting the relief. (P5)

For many participants, the impulsive pursuit of momentary satisfaction was given priority at the onset of hairpulling urges, regardless of any longer-term consequences or competing tasks in need of attention.

6.3.2.6 Perfectionistic standards (for hair quality). Most participants reported a preference for pulling hairs that they perceived to have a displeasing physical composition; “fuzzy” (P8), “kinky”, “grey”, (P2), “too thick”, “rough” (P3), “split” (P5), “not just nice and even” (P7), or “going in the wrong direction” (P1). Removing these hairs was perceived to improve symmetry or achieve a “just right” standard in the aesthetic of their hair. In doing so, several participants described the reinforcing consequences of achieving a sense of mastery by striving for perfection in their hair quality.

6.3.2.6.1 Just right standards. Participants reported feeling anxious and physically tense until they could begin creating more symmetry in their hairline, hair length, or sense of hair volume by removing hairs that felt “out of place.” (P7)

One participant explained that as she searched her scalp for target hairs to remove she would ask herself, “[are] there any other bumps there, anything that doesn’t feel exactly right?” (P1). She compared them to “normal hairs [which] have kind of a tapered end to them, whereas a broken hair just has that blunt edge, which isn’t quite right”. For many participants, becoming aware of imperfect hair strands was an uncomfortable experience that was poorly tolerated;

> It’s kind of like having all these splinters and you just need to pull them all out, but they’re there all the time and you don’t notice them, but once you notice them then you want to do something about them. (P1)

For one participant in particular, imperfect hairs created a source of significant discomfort;

> I just notice that it’s different from all the others. And so it’s not right. And so it’s different and I want it to go because it’s not perfect and the rest of them are

> perfect, and this one isn't. It's kinky, it's rough, it's weak, it's thick or it's coarse, and it's not correct. It's just not meant to be there. (P8)

6.3.2.6.2 Mastery through perfection. Just as imperfect hairs created distress and discomfort, part of the relief and satisfaction experienced throughout a hairpulling episode could be attributed to pulling such hairs out. One participant explained the way this process influenced her decision to commence hairpulling, and the way she felt upon completion of a hairpulling episode;

> Just touching my eyebrows a lot and then actually pulling it feels like quite, quite a clean thing to do. Like, 'that's the hair that shouldn't be there but I can take it out'. And then it's kind of cleaner that it's not there. (P3, before pulling)

> A definite sense of, 'oh, it's gone' – a sense of relief, and I do feel kind of cleansed. Like something's off my chest. (P3, after pulling)

Continuing her reflections on imperfect hairs, participant 8 further explained;

> I don't know why it feels wrong to me, there's something about it that's faulty, false, wrong, imperfect, not like the rest of the hair, and I need to get rid of it. There's a need to dispose of it. Um, but there's also pleasure in finding it, 'ooh, I do have one'! (P8)

For these participants, the undesirable tactile sensations were associated with positive outcomes such as relief, pleasure, gratification, and even mastery, through removing an element of oneself that was appraised as intolerable or unacceptable.

6.4 Discussion

This study investigated the nature and role of dysfunctional cognitions and beliefs in TTM utilising an exploratory, qualitative methodology in a small clinical sample. Six superordinate beliefs were identified as relevant antecedent and/or maintaining factors: negative self-beliefs, control beliefs, coping beliefs, beliefs about negative emotion, permission-giving cognitions, and perfectionistic standards (for hair quality). Many of these beliefs have been previously postulated to play a role in TTM and hairpulling behaviours (Franklin & Tolin, 2007; Gluhoski, 1995; Mansueto et al., 1997; Norberg et al., 2007; O'Connor et al., 2014; Roberts et al., 2013). However, this study provides the first in-depth exploration of the content and influence of dysfunctional cognitions in TTM without presupposing those cognitions based upon purportedly related disorders. The beliefs identified in this study are similarly implicated in disorders that feature elements of compulsivity (e.g., other OCRDs; OCCWG, 2005) and impulsivity (e.g., substance use disorders; Beck et al., 1993), reflecting recent theorising that TTM phenomenology is the heterogeneous expression of the psychobiological mechanisms underlying both traits (Flessner et al., 2012).

In their biopsychosocial model of TTM, Franklin and Tolin (2007) proposed that negative self-evaluations initially arise as a result of the adverse consequences of repeated hairpulling. Over time, these thoughts become cues that independently prompt hairpulling episodes. Our findings provided support for Franklin and Tolin's hypothesis, having demonstrated that negative self-beliefs facilitated hairpulling episodes. However, at least one participant (P5) attributed her development of TTM to pre-morbid low self-esteem. Cognitive models of OCD and BDD have suggested that maladaptive self-construals may underlie the development of those disorders (Buhlmann, Teachman, Naumann, Fehlinger, & Rief, 2009; Doron et al., 2007; García-Soriano, Clark, Belloch,

del Palacio, & Castaneiras, 2012; Phillips et al., 2011). Although the direction of the relationship between negative self-beliefs and the development of TTM cannot be defined given the current study's methodology, participants identified that hairpulling helped to minimise their negative self-evaluations by re-directing their attention toward the goal of extracting and manipulating hairs.

Participants explained that their attention was particularly drawn to the goal of achieving perfectionistic hair qualities, which encouraged a sense of mastery and self-efficacy. From the perspective of behavioural models, this serves a positively reinforcing function. However, given the element of control that was also derived from targeting imperfect hairs (e.g., "that's the hair that shouldn't be there but I can take it out", P3), the function of striving for perfectionistic hair standards in TTM may also be to attain a sense of control similar to the proposed function of compulsions in OCD (e.g., Moulding & Kyrios, 2006). Participants' descriptions of the hairpulling process reflected the importance of maintaining control over the hair itself, oneself, and life more generally, while perceived loss of control was associated with negative affect and appraisals. High desire for control but low sense of control has been associated with OCD symptoms and OCD-related beliefs among analogue and clinical samples (Moulding et al., 2008, 2009; Moulding & Kyrios, 2006). In the case of TTM, as has been suggested in OCD models, a discrepancy between desire for and sense of control may generate distress, which fuels one's motivation to engage in compulsive acts (i.e., hairpulling) to increase perceptions of control. This is an as-yet unexplored theory in TTM.

Currently, focused hairpulling is specifically believed to facilitate emotion regulation while automatic hairpulling is conceptualised as more akin to a stereotypic motor habit (e.g., Begotka et al., 2004; Flessner, Woods, et al., 2008; Mansueto et al.,

1997). However, of the eight participants in the current study, only one described her primary hairpulling style as focused despite all participants having articulated a range of beliefs identified to trigger and/or maintain their hairpulling. Given that Flessner, Conelea, and colleagues (2008) reported that less than 0.01% of their 1,545 participants with TTM symptoms did so exclusively according to one style, our findings may suggest that regardless of an individual's primary hairpulling style, cognitions and beliefs are likely to play a significant role in TTM. It therefore may not be necessary to dichotomise treatment according to an individual's primary hairpulling style, providing further support for the importance of treatment approaches that simultaneously target the hypothesised functions of both hairpulling styles, such as augmenting BT with ACT or DBT (e.g., Crosby et al., 2012; Keuthen et al., 2012; Woods, Wetterneck, et al., 2006).

As Gluhoski (1995) proposed, the current study identified that beliefs regarding self-control, expectations for the value of hairpulling as a coping strategy, and permission-giving cognitions perpetuated TTM symptoms. However, the current study also identified a complex interaction of other beliefs that serve to expand this addiction-based model to incorporate concepts from models of anxiety, OCRDs, and emotion regulation. We propose a new model (Figure 6.1) which may be integrated with behavioural models of TTM, although further research will be necessary to validate such suggestions.

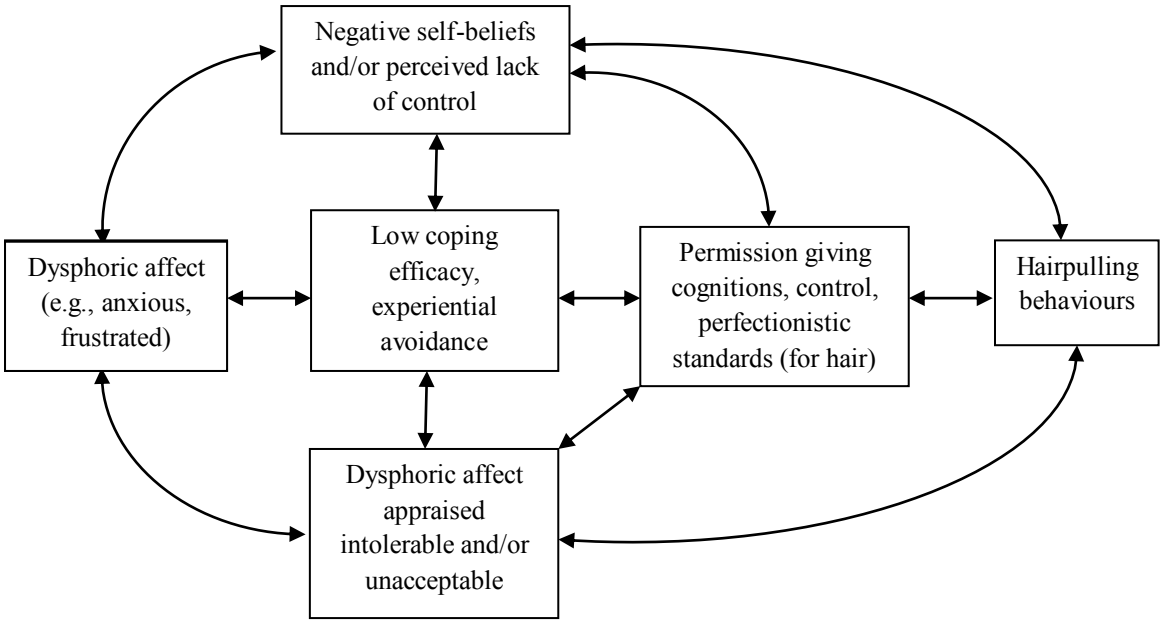

Figure 6.1. Preliminary model of identified cognitions and beliefs in TTM. Some possible relationships between constructs have been noted, but directions of effects are preliminary.

Initially, negative self-beliefs and/or a perceived lack of control precipitate hairpulling episodes. These cognitions elicit distressing emotions such as anxiety and frustration, which are automatically appraised as unacceptable and/or intolerable. Beliefs about negative emotions perpetuate the individual's low coping efficacy and reluctance to use alternative coping strategies. In part, this reluctance is a result of appraising hairpulling behaviour as beyond one's control. Through diminished self-efficacy, individuals enter into a permission-giving narrative that justifies or rationalises hairpulling. Focusing on removing hairs of particular tactile or aesthetic qualities distracts from unpleasant internal experiences and is re-framed as a pursuit for achieving perfectionistic hair standards. Hairpulling behaviours facilitate immersion in tactile sensations and a sense of relief, serving an emotion regulation function via

experiential avoidance. Upon completion of the hairpulling episode, negative self-beliefs return and perpetuate hairpulling in the absence of inhibitory factors.

This study is subject to several limitations. First, the majority of participants (*n* = 5) originated from the same support group. These individuals were likely to have had greater insight and confidence in discussing their condition than others with TTM who may experience strong shame and secrecy as barriers (e.g., Glazier et al., 2015) to participating in an electronically-recorded, in-depth interview. Indeed, of the 12 participants who expressed interest to participate, only eight provided their consent to do so, and recruitment of these eight participants spanned nine months. In part, this situation is likely a result of the very limited awareness, research opportunities, and resources for TTM in Australia at the time, and which continues into the present.

Second, this sample consisted of eight well-educated, unmarried women with TTM. For this reason, IPA was selected as the appropriate method of qualitative analysis because it encourages the use of small, homogenous samples to produce a fine-grained analysis of complex psychological phenomena; particularly in areas that have been subjected to limited research and would benefit from a hypothesis-generating approach (Smith & Osborn, 2008). Further, TTM predominantly affects women and other studies have similarly used female-only samples to explore its phenomenology, trajectory, and impact (e.g., Flessner et al., 2009). However, it is possible that men with TTM espouse different beliefs.

It is important to acknowledge that the clinical characteristics of this sample (e.g., disorder age of onset, treatment seeking history, symptom severity, comorbidity) were representative of other TTM samples (e.g., Christenson, Mackenzie, et al., 1991; Woods, Flessner, et al., 2006). Nevertheless, it is necessary that additional research is

carried out to determine whether the cognitions and beliefs identified here are represented in a larger, more diverse group of individuals with TTM symptoms and compared with non-clinical participants; this was be the task of the remaining three studies comprising this thesis (Chapters 7 – 8).

Third, the high level of comorbidity in this sample (particularly of depression) raises issues about the specificity of these cognitions to TTM. The cognitive content (e.g., worthlessness) and styles (e.g., all-or-nothing thinking) identified in this study have long been established in, and assumed specific to, depression (Beck, 1976; Beck, Rush, Shaw, & Emery, 1979). However, several cognitive-affective processes including perfectionism, experiential avoidance, and self-focused attention are increasingly being recognised as transdiagnostic maintenance mechanisms across various psychological disorders (Chawla et al., 2007; Egan, Wade, & Shafran, 2011; Harvey, Watkins, Mansell, & Shafran, 2004). Similarly, beliefs such as an inflated sense of responsibility/threat, perfectionism/need for certainty, and importance/control of thoughts, while not specific to OCD (e.g., OBQ-44; OCCWG, 2005), are nevertheless considered integral to comprehensive case formulation and treatment planning when working with individuals with OCD (Clark, 2004; Frost & Steketee, 2002). Indeed, participants in the current study reported similarly high scores on the OBQ-44 domains as have OCD samples (OCCWG, 2005), which may also suggest a need to examine the relationships between these particular beliefs and TTM symptoms in larger samples. With comorbidity rates in TTM exceeding 80% (Christenson, Mackenzie, et al., 1991) and evidence that pre-treatment depression severity may moderate long-term treatment outcomes (Keijsers et al., 2006), the identification of maladaptive cognitions in TTM, whether disorder-specific or transdiagnostic, has the potential to inform a truly

comprehensive cognitive behavioural model of TTM and enhance the effectiveness of CBT approaches.

As mentioned, the presence and relevance of the beliefs identified in this qualitative analysis require evaluation in larger and more diverse clinical and non-clinical samples. The development of a measure of beliefs in TTM was conceived of as one method of achieving this kind of evaluation on a larger, quantitative scale. Exploratory and confirmatory factor analyses (Studies 2 – 3) would not only support the evaluation of whether the cognitions identified in this study may generalise beyond the current sample, but were construed as appropriate methods of more clearly judging the inter-relationships and potential overlap between themes identified as distinct within the qualitative analysis (e.g., the distinction between coping and control-related beliefs). The development and validation of a measure was also considered an appropriate method to determine the specificity of the identified beliefs to TTM when controlling for mood symptoms, and to help answer the broader question of how relevant cognitions really are to TTM phenomenology.

7. CHAPTER 7 – Studies 2 and 3: Factor Analyses of the Beliefs in TTM Scale

7.1 General Introduction

The previous study (Chapter 6) investigated the nature of dysfunctional cognitions and beliefs in eight women with TTM using qualitative methodology. Six themes of cognitions were identified as influential to the onset and maintenance of hairpulling episodes: negative self-beliefs, control beliefs, coping beliefs, beliefs about negative emotion, permission-giving cognitions, and perfectionistic standards (for hair quality). This study provided qualitative support for the cognitions that have previously only been speculated to play a role in TTM (Franklin & Tolin, 2007; Gluhoski et al., 1995; Mansueto et al., 1997; Roberts et al., 2013), and additionally provided rich, in-depth descriptions of the cognitions and beliefs that have thus far accumulated only preliminary quantitative support (Duke et al., 2009; Duke, Keeley, Ricketts, et al., 2010; Norberg et al., 2007; O'Connor et al., 2014; Scott & Stevenson, 2015).

However, there were several limitations to this study, which justified the need for further investigation of the role of dysfunctional cognitions in TTM. The six core beliefs were identified within a small and homogeneous sample of highly educated women; most of whom had insight and confidence in describing their experiences of TTM as a result of previous participation in a peer support group. It remains to be determined if these beliefs generalise to a larger sample of demographically diverse males and females with TTM symptoms. Additionally, the high levels of mood disorder comorbidity in the sample and the use of qualitative methodology meant that there was no way to determine how specific the six identified beliefs were to TTM. Finally, there was considerable conceptual overlap between themes identified as distinct within the qualitative analysis, particularly around the themes of control and coping.

A quantitative approach has the potential to overcome these limitations. Specifically, the development of a measure of TTM-relevant beliefs, using the six qualitative themes identified in Study 1 to guide item development, was deemed particularly appropriate for the purpose of this thesis for two main reasons. First, the development of a measure was conceptualised as a means of operationalising the six identified beliefs such that they could be adequately measured, and their structure, reliability, validity, and replicability explored in larger, demographically diverse samples. Factor analysis techniques (e.g., exploratory factor analysis) are useful strategies for exploring the structure of a particular phenomenon or construct of interest (Pett, Lackey, & Sullivan, 2003), and additionally, they facilitate investigation of the interrelatedness of constructs. Hence, the development of a measure of TTM-relevant beliefs and factor analysis of its internal structure was conceptualised as a way to disentangle overlapping themes that were identified as distinct within the qualitative analysis.

Second, the development of psychometrically sound measures of TTM symptoms and phenomenology will be essential for the ongoing evaluation of treatment efficacy (Bauer, 2014; Diefenbach, Tolin, Crocetto, et al., 2005; McGuire et al., 2012). The measurement of cognitive-affective factors that are especially relevant to TTM will play a critical role in evaluating the efficacy of treatment components, such that the current abundance of multi-component CBT approaches can be refined to justifiably include those strategies that produce the greatest behaviour change. For example, inclusion of emotion regulation and experiential avoidance measures in the evaluation of third-wave CBT approaches for TTM has influenced current theorising that emotion dysregulation is a key behaviour change mechanism to be targeted in its treatment (Keuthen et al., 2012; Roberts et al., 2013; Woods, Wetterneck, et al., 2006). However,

generic emotion regulation measures are less sensitive to monitoring how this changes over the course of TTM treatment compared to measures that have been developed to evaluate the specific array of emotions (e.g., boredom, tension) that hairpulling serves to modulate (e.g., the ARR; Keuthen et al., 2011, 2012). Recently, a TTM-specific version of the AAQ-II has been developed (the AAQ-TTM), and its scores were significantly more strongly correlated with TTM severity than were scores on the original AAQ-II (Houghton et al., 2014). Hence, there is value in developing measures that reference TTM-relevant cognitive-affective processes as opposed to utilising existing measures that have been developed for mood-based psychopathology.

The primary aim of Studies 2 and 3 was therefore to develop and validate a psychometric measure of dysfunctional cognitions relevant to TTM, named the Beliefs in TTM Scale (BiTS). The BiTS item development process will next be outlined, followed by an overview of the methodology of the two studies featured in this chapter. Studies 2 and 3 will then be presented, each featuring an introduction, method, results, and discussion section. Finally, this chapter will end with a general discussion of the findings, limitations, and implications of both studies.

7.1.1 Item development. Qualitative investigation of a phenomenon of interest is a useful method of generating empirical indicators to use in measure development (Pett et al., 2003). This approach was considered both appropriate and necessary for the purposes of the current thesis, given that the limited research on the content and contribution of dysfunctional cognitions and beliefs in TTM precluded a thorough literature review to guide concept analysis and item development (as per standard approaches to measure development in the social and health sciences; Pett et al., 2003).

The item pool for the BiTS featured 50 items designed to reflect the six superordinate themes, comprised by their subordinate themes, as identified in the qualitative analysis of Study 1. For example, the superordinate theme of control was comprised of items designed to reflect its three subordinate themes: the importance of control (e.g., “Being in control is very important to me”), level of ambivalence about choice (e.g., “I always have a choice in determining my own behaviour, thoughts, and the way I feel”), and loss of control (e.g., “In times of change I feel out of control”). It was decided not to specifically reference hairpulling behaviour in any of the items in order for the BiTS to be validated in samples with and without TTM symptoms, and to enable future investigation of the relationship of TTM-relevant beliefs to other OCRDs (e.g., OCD, BDD) in comparison to TTM.

Initially, a list of 53 items was developed and provided to two researchers (co-supervisors), one of whom has expertise in developing and validating measures of cognitive phenomena in OCRDs. The second researcher contributed to the qualitative analysis of Study 1, and was therefore familiar with participant transcripts and the identified themes to ensure that the six superordinate beliefs were appropriately represented by the BiTS items. Following guidelines of Pett et al. (2003), both researchers provided feedback on item readability (i.e., grammar, expression, clarity) and relevance to the construct of each theme being referenced. Based on this feedback, three items were deleted for their ambiguous relation to the thematic construct in question, leaving 50 final BiTS items. Remaining items were amended as necessary to improve readability and reduce overlap between constructs. These final items were agreed upon with the input of a third researcher (primary supervisor) who also has expertise in developing and validating measures of cognitive phenomena in OCRDs.

7.1.2 Methodology. Using convenience and purposive sampling procedures, a sample of participants with and without self-reported non-cosmetic hairpulling behaviours was pooled and randomly split to create separate samples for the exploratory factor analysis (EFA) of Study 2 and the confirmatory factor analysis (CFA) of Study 3. Using an online survey to maximise participation rates, hairpulling behaviours were assessed via self-reported categorical endorsement (yes/no) of perceived difficulties with non-cosmetic hairpulling in the previous 12 months. This categorical approach was used to enable examination of group differences on BiTS scores and other relevant variables. Self-reported severity of hairpulling behaviours and urges within the previous week, as measured by the MGHHPS, was also assessed to enable examination of the relationships between TTM symptoms, BiTS scores, and other relevant variables in the pooled sample to protect against range restriction.

Factor analyses of the BiTS were also performed using the pooled sample of participants irrespective of endorsement of non-cosmetic hairpulling behaviours. This was justified on the basis of increasing evidence to suggest that non-cosmetic hairpulling in community and student samples ranges on a continuum from normal (i.e., non-clinical) to pathological (i.e., clinical TTM), and that like clinical TTM, non-clinical hairpulling is similarly associated with emotion regulation (Ghisi et al., 2013; Stanley et al., 1994; Woods & Miltenberger, 1996; Stanley, Borden, Mouton, & Breckenridge, 1995). As others have pointed out, the threshold at which non-cosmetic hairpulling behaviours should be considered clinically significant has not been empirically established (Shusterman et al., 2009). There is additionally evidence to suggest that non-cosmetic hairpulling which is not associated with distress or impairment results in very similar heritability estimates to those reported for hairpulling behaviours meeting modified and full *DSM-IV-TR* criteria for TTM (Novak et al.,

2009). These findings somewhat mirror those of the OCD literature, in which non-clinical samples are commonly employed for measure development and validation (for a review, see Abramowitz, Fabricant, Taylor, Deacon, McKay, & Storch, 2014) because obsessions and compulsions in such populations differ in terms of *degree* as opposed to form or content (Muris, Merckelbach, & Clavan, 1997; Rachman & de Silva, 1978; Salkovskis & Harrison, 1984).

Nevertheless, given the possibility that different groups can produce different factors (Tabachnick & Fidell, 2007), it was important to replicate the validity of the identified factor structure in a second pooled sample using CFA, and to evaluate model equivalency (i.e., invariance) between participants who did and did not endorse non-cosmetic hairpulling behaviours using multi-group CFA. These analyses formed the basis of Study 3.

An additional aim of Studies 2 and 3 was to examine the internal consistency and construct validity of the BiTS. Internal consistency measures how reliably items measure the same latent construct (i.e., how much common variance is accounted for by a set of items; Cortina, 1993; Cronbach, 1951). It is important for items (and the subscales they form) to be interrelated, but not so highly interrelated so as to suggest that items are not contributing unique variance to the measurement of the construct (Streiner, 2003). Construct validity refers to "the extent to which a test measures what it 'purports' to measure" (Guion, 1980, p. 388), and is established by providing evidence of convergent and divergent validity. Convergent validity is established when scale scores correlate highly with measures of similar or related constructs, while divergent validity is demonstrated by poor correlations between scale scores of dissimilar or unrelated constructs (Campbell & Fiske, 1959). Measures with which to establish convergent and divergent validity of the BiTS were selected along the lines of

the six superordinate themes identified within the qualitative analysis because these themes were utilised to guide item development, as explained in section 7.1.1. Hence, several measures of emotion- and self-regulatory processes were selected to evaluate construct validity of the BiTS. For instance, the Rosenberg Self-Esteem scale (Rosenberg, 1965) was selected as one measure to evaluate convergent validity of items tapping into negative self-beliefs, were such a factor to emerge from the EFA.

7.2 Study 2: Exploratory Factor Analysis

7.2.1 Introduction. Study 2, presented here, is the first study to examine the psychometric development and validation of the BiTS. EFA is commonly employed in measure development as it enables the identification of distinct, underlying constructs (i.e., factors), which are represented by the shared variance of a reduced set of correlated items (Pett et al., 2003; Tabachnick & Fidell, 2007). EFA can therefore be utilised to determine the relationships (i.e., structure) between sets of items that statistically comprise specific factors; factors that are assumed to reflect some clinically meaningful construct (Pett et al., 2003).

As per its name, EFA is an exploratory, as opposed to a hypothesis-testing, technique (Costello & Osborne, 2005; Tabachnick & Fidell, 2007). Arguably, the results of the qualitative study in combination with past theorising and emerging quantitative evidence for the six beliefs of relevance to TTM could have provided sufficient rationale to employ a hypothesis-testing approach such as CFA. Performing only a CFA without first conducting an EFA was decided against due to the need to disentangle the several interrelated qualitative themes, and the fact that the role of cognitions and beliefs in TTM still remains a preliminary area of research that would strongly benefit from the generation of future hypotheses (as per the scope of EFA).

The aim of Study 2 was therefore to utilise EFA to examine the factor structure of the original 50-item BiTS, such that a shorter measure could be developed, and its internal consistency and construct validity, assessed. Additionally, this study aimed to investigate the magnitude of the relationship between TTM-relevant beliefs and hairpulling severity and styles, and to determine the relative contribution of TTM-relevant beliefs to hairpulling severity while controlling for depression and anxiety symptoms. It was hypothesised that greater endorsement of TTM-relevant beliefs, as measured by the BiTS, would be significantly and positively correlated with hairpulling severity, over and above depression and anxiety. Additionally, it was hypothesised that BiTS scores would be significantly and positively correlated with focused hairpulling but not automatic hairpulling, given that focused hairpulling is operationalised as that which is specifically initiated in response to negative internal states, including sensations, emotions, and cognitions (Flessner, Conelea, et al., 2008). Finally, it was also anticipated that, controlling for depression and anxiety symptoms, participants who reported non-cosmetic hairpulling behaviours would report significantly greater BiTS scores than participants who did not report non-cosmetic hairpulling behaviours.

7.2.2 Method.

7.2.2.1 Participants. Participants were eligible to participate if they were aged 18 years or older. There were no exclusion criteria. Participants were recruited through undergraduate psychology courses at Swinburne University of Technology in receipt of partial course credit; through the researchers' personal and professional networks; and through national and international TTM-specific advocacy organisations, online support groups and forums, and social networking websites (Appendix O). This blend of convenience and purposive sampling was used to ensure a wide range of participants

endorsing varying degrees of non-cosmetic hairpulling behaviours (i.e., from non-clinical to clinical).

Between September 2013 and June 2014, 2,313 participants had accessed the online survey. Of those, 849 participants (36.7%) had provided partially complete responses. Six underage participants (all of whom endorsed non-cosmetic hairpulling) and two duplicate records were removed, resulting in a final sample of 841 participants with partially complete responses. Of the 841 participants, 527 participants (62.7%) endorsed non-cosmetic hairpulling behaviours in the previous 12 months. To form separate samples for the EFA (Study 2) and CFA (Study 3), the sample was randomly split into two groups using Statistical Package for the Social Sciences software (SPSS version 22.0).

Table 7.1 presents demographic characteristics of the EFA sample, which was comprised of 421 participants in total (M_{age} = 25.02, *SD* = 8.19). Two-hundred and fifty nine (61.5%) participants in the EFA sample reported engaging in non-cosmetic hairpulling behaviours within the previous 12 months. On average, participants with hairpulling behaviours (HP participants) were aged 27 years (*SD* = 8.75) and the majority (97%) were female. The 162 non-hairpulling participants (NP participants) had a mean age of 21.90 (*SD* = 6.05) and 76.5% were female. HP participants were significantly older than NP participants [$t(413.34) = 7.03$, $p < .001$, equal variances not assumed], and there was a significantly greater proportion of females than males in the HP sample than in the NP sample [$\chi^2(1, n = 421) = 42.82$ (Yates Continuity Correction), $p < .001$, phi = -.33].

Table 7.1

Frequencies (%) for Participant Demographic Variables

Variable	Pooled sample (*N* = 421)	HP participants (*n* = 259)	NP participants (*n* = 162)
Gender			
Female	376 (89.3)	252 (97.3)	124 (76.5)
Male	45 (10.7)	7 (2.7)	38 (23.5)
Employment status			
Full-time	100 (23.9)	89 (34.6)	11 (6.8)
Part-time/casual	169 (40.4)	73 (28.4)	96 (59.3)
Retired	4 (1.0)	4 (1.6)	0 (0.0)
Unemployed	145 (34.7)	91 (35.4)	54 (33.3)
Education			
Secondary college	223 (53.0)	107 (41.3)	116 (71.6)
Vocational college	49 (11.6)	32 (12.4)	17 (10.5)
Undergraduate degree	102 (24.2)	79 (30.5)	23 (14.2)
Postgraduate degree	47 (11.2)	41 (15.8)	6 (3.7)
Marital status			
Single	301 (71.5)	167 (64.5)	134 (82.7)
Married	72 (17.1)	61 (23.6)	11 (6.8)
De facto	35 (8.3)	19 (7.3)	16 (9.9)
Divorced	13 (3.1)	12 (4.6)	1 (0.6)
Nationality			
Australia	199 (47.3)	50 (19.3)	149 (92.0)
United Kingdom & Ireland	34 (8.1)	30 (11.6)	4 (2.5)
North America	152 (36.1)	145 (56.0)	7 (4.3)
Central and South America	3 (1.2)	3 (1.2)	0 (0.0)
Canada	9 (2.1)	7 (2.7)	2 (1.2)

Table 7.1 continued

Variable	Pooled sample (*N* = 421)	HP participants (*n* = 259)	NP participants (*n* = 162)
Europe & former USSR	11 (2.6)	11 (4.2)	0 (0.0)
South East Asia & China	2 (0.5)	2 (0.8)	0 (0.0)
New Zealand & Pacific	5 (1.2)	5 (1.9)	0 (0.0)
Africa	4 (1.0)	4 (1.5)	0 (0.0)
Middle East	1 (0.2)	1 (0.4)	0 (0.0)
Not reported	1 (0.2)	1 (0.4)	0 (0.0)

Note. Three participants did not report employment status.

7.2.2.2 Measures. Via an online survey, all participants were asked "Over the past 12 months, have you experienced difficulties with pulling out your hair or urges to pull out your hair for non-cosmetic purposes?" Participants who responded affirmative to this question were classified as hairpulling participants (HP participants), while those who responded negative to this question were classified as non-hairpulling participants (NP participants). Similar procedures for sampling participants with and without non-cosmetic hairpulling behaviours in online, student, and community settings have been utilised elsewhere (e.g., Duke et al., 2009; Duke, Keeley, Ricketts, et al., 2010; Shusterman et al., 2009). Participants completed the following measures:

The *Massachusetts General Hospital Hair Pulling Scale* (MGHHPS; Keuthen et al., 1995; O'Sullivan et al., 1995; Appendix G) is a measure of the severity of hairpulling behaviours and urges in the previous week. This measure was used and described in Study 1 (Chapter 6).

The *Milwaukee Inventory for Subtypes of Trichotillomania – Adult version* (MIST-A; Flessner, Woods, et al., 2008; Appendix P) is a 15-item self-report measure of two styles of hairpulling that characterise TTM; automatic and focused. Automatic hairpulling typically occurs beyond the individual's awareness during sedentary activities, while focused hairpulling is intentionally performed in response to negative affect, cognitions, urges, or to establish symmetry (Flessner, Woods, et al., 2008). Each item is rated on a 10-point Likert scale ranging from 0 (*not true for any of my hair pulling*) to 9 (*true of for all of my hair pulling*). Scores for each of the two subscales are summed, with higher scores reflecting higher levels of focused and automatic hairpulling. Both scales demonstrated adequate internal consistency (range of $\alpha = 0.73 – 0.77$), and good construct and discriminant validity in an internet-surveyed sample of 1,697 participants with self-reported TTM symptoms (Flessner, Woods, et al., 2008). In the current study, participants who did not endorse non-cosmetic hairpulling behaviours were not required to complete the MIST-A.

The *Beliefs in Trichotillomania Scale* (BiTS) was developed for the current study. Items were designed to reflect the six superordinate themes of cognitions and beliefs identified within the qualitative analysis of Study 1 (Chapter 6). Details on item development were described in section 7.2.1.1 of this chapter. Items were measured on a 7-point Likert scale ranging from 1 (*disagree very much*) to 7 (*agree very much*). There were no reverse-scored items. Participants were instructed to rate their level of agreement with each item and assured that there were no right or wrong answers in order to reduce defensive or socially-desirable responding (Pett et al., 2003). The factor structure and psychometric properties of the BiTS were assessed as part of this thesis. A copy of the 50-item BiTS is included in Appendix Q.

The *Depression Anxiety Stress Scales-21* (DASS-21; Lovibond & Lovibond, 1995; Appendix R) is a 21-item self-report scale that measures symptoms of depression, anxiety, and stress in clinical and non-clinical populations. Each subscale (depression, anxiety, stress) is comprised of seven items that are rated on a 4-point Likert scale, where higher scores reflect greater symptom severity. The DASS-21 subscales have demonstrated good internal consistency (range of $\alpha = 0.82 – 0.94$), divergent validity, and convergent validity in clinical and non-clinical samples (Antony, Bieling, Cox, Enns & Swinson, 1998; Henry & Crawford, 2005).

The *Obsessional Beliefs Questionnaire-44* (OBQ-44: OCCWG, 2001, 2005; Appendix I) is a self-report scale that measures beliefs associated with OCD. This measure was used and described in Study 1 (Chapter 6). Only the 16-item perfectionism/certainty (PC) subscale was utilised in the current study. Higher scores reflect a greater need for PC. The PC subscale has demonstrated high internal consistency ($\alpha = 0.89$) among a sample of individuals with OCD (OCCWG, 2005).

The *Urgency, Premeditation, Perseverance, Sensation-Seeking Impulsive Behaviour Scale* (UPPS: Whiteside & Lynam, 2001; Appendix S) measures the multidimensional nature of impulsivity. It contains 45 items measured on a 4-point Likert scale. Four subscales measure the following aspects of impulsivity: (1) premeditation (lack of), (2) negative urgency, (3) sensation seeking, and (4) perseverance (lack of). Scale scores are calculated as means. The four subscales of the UPPS demonstrated high internal consistency (range of $\alpha = 0.82 – 0.91$), as established within a large non-clinical sample (Whiteside & Lynam, 2001). The current study only utilised three subscales (premeditation, urgency, perseverance), comprising 33 items.

The *Acceptance and Action Questionnaire-II* (AAQ-II: Bond et al., 2011; Appendix T) is a 10-item self-report questionnaire designed to measure experiential avoidance. Items are rated on a 7-point Likert scale, with higher scores reflecting greater levels of experiential avoidance. The AAQ-II has demonstrated adequate to good internal consistency (range of $\alpha = 0.78 – 0.88$) across a range of large clinical and non-clinical samples, and has demonstrated improved test-retest reliability upon the original AAQ-I (Bond et al., 2011).

The *Rosenberg Self-Esteem Scale* (RSE; Rosenberg, 1965; Appendix U) is a 10-item self-report instrument for evaluating an individual's global self-esteem. Items are scored according to a Likert scale ranging from 1 (*strongly agree*) to 4 (*strongly disagree*). Higher total scores indicate higher self-esteem. The RSE has demonstrated good test-retest reliability ($r = .69$) and high internal consistency (range of $\alpha = 0.88$ - 0.90) across a range of community and college student samples (Robins, Hendin & Trzesniewski, 2001).

The *Anxiety Control Scale-Revised* (ACQ-R: Brown et al., 2004; Rapee, Craske, Brown & Barlow, 1996; Appendix V) is a 15-item self-report measure of one's perceived level of control over anxiety-provoking events and anxiety-based emotional reactions. Three subscales are derived: (1) control of emotions, (2) control of threat, and (3) control of responses to stress. Higher scores reflect greater perceived anxiety control. The ACQ-R achieved good internal consistency, test-retest reliability, and convergent and divergent validity within a large clinical sample (Brown, White, Forsyth & Barlow, 2004).

The *Difficulties in Emotion Regulation Scale* (DERS; Gratz & Roemer, 2004; Appendix W) is a comprehensive 36-item self-report measure of emotion dysregulation.

Items are scored according to a Likert scale, ranging from 1 (*almost never*) to 5 (*almost always*). Higher scores reflect greater emotion dysregulation. Six subscales can be derived: (1) non-acceptance of emotional responses, (2) difficulties engaging in goal-directed behaviour, (3) impulse control difficulties,(4) lack of emotional awareness, (5) limited access to emotion regulation strategies, and (6) lack of emotional clarity. The DERS has demonstrated high internal consistency ($\alpha = 0.93$), good test-retest reliability, and adequate construct validity in a large non-clinical sample (Gratz & Roemer, 2004).

The *Distress Tolerance Scale* (DTS; Simons & Gaher, 2005; Appendix X) is a 15-item self-report measure of distress tolerance. The four subscales indicate: (1) one's perceived ability to tolerate emotional distress, (2) subjective appraisals of distress, (3) the level of attention being absorbed by their experience of distress, and (4) regulation efforts employed to alleviate distress. Participants rate their beliefs about being distressed or upset according to a 5-point Likert scale, where high scores reflect better distress tolerance. Scale scores are calculated as means. The DTS demonstrated good convergent, discriminant, and criterion-related validity (Simons & Gaher, 2005).

7.2.2.3 Procedure. Participants completed the surveys online via *PsychSurveys* (www.psychsurveys.org). Responses were saved anonymously on the *PsychSurveys* platform and downloaded by the research student. Data was collected between September 2013 and June 2014. Prior to completing the surveys, participants were informed of the study's purpose and participation requirements through an online written statement (Appendix Y). Participants were informed that their completion of the surveys implied their consent to participate. After collection of demographic information, participants completed measures in the following order: MGHHPS, MIST-A, BiTS, DASS-21, OBQ-PC, UPPS, AAQ-II, RSE, ACQ-R, DERS, DTS. Survey completion time was approximately 40 minutes. The study protocol was approved by

the Human Research Ethics Committees of Swinburne University of Technology and Deakin University (Appendix Z).

7.2.3 Results.

7.2.3.1 Sample characteristics. Table 7.2 presents the means and standard deviations on measures of TTM symptoms, mood symptoms, and other variables of interest for the pooled sample, and separately for HP and NP participants. As shown, HP participants endorsed significantly more severe hairpulling behaviours and urges (MGHHPS), depression and anxiety symptoms (DASS-21), greater difficulties with emotion regulation processes (DERS, ACQ-R, AAQ-II, DTS), a higher need for perfectionism/certainty (OBQ-PC), and poorer self-esteem (RSE) than did NP participants. Except for lack of premediation, HP participants also reported significantly greater impulsive behaviours (UPPS).

It is important to note that during the early stages of data collection, NP participants were erroneously directed not to complete the MGHHPS, which resulted in only 34 of the 162 NP participants reporting data for this variable. NP participants with and without MGHHPS scores did not significantly differ by age [$t = 0.55(160)$, $p = .582$] or gender [$\chi^2(1, n = 162) = 0.48$ (Yates Continuity Correction), $p = .357$, phi = .07]. As presentation of the measures was not randomised, the number of participants reporting data for each variable declines according to the placement of the measure in the survey battery (e.g., the DTS was completed by fewer participants as this was the last measure in the battery).

Table 7.2

Means, (Standard Deviations), and Group Differences on Symptom Measures and Self-regulation Variables

Variable	Pooled sample		HP participants		NP participants		Test statistic
	M (*SD*)	*N*	*M* (*SD*)	*N*	*M* (*SD*)	*N*	
TTM symptoms							
MGHHPS	15.44 (7.69)	274	17.60 (5.44)	240	0.18 (0.72)	34	$U = 76.50$, $z = -9.28$, $p < .001$
MIST-A Focused	-	-	47.23 (16.29)	*227*	-	-	-
MIST-A Automatic	-	-	27.35 (9.02)	*227*	-	-	-
Mood symptoms							
DASS-D	6.91 (5.85)	334	9.10 (5.77)	188	4.10 (4.63)	146	$t(332) = 9.72$, $p < .001$[a]
DASS-A	5.43 (4.88)	334	6.84 (4.73)	188	3.62 (4.45)	146	$U = 7532.0$, $z = -7.10$, $p < .001$
Emotion regulation							
DERS	98.20 (27.37)	294	109.20 (25.98)	152	86.42 (23.74)	142	$t(292) = 7.83$, $p < .001$
DTS	2.93 (0.88)	293	2.62 (0.84)	152	3.27 (0.80)	141	$t(291) = -6.81$, $p < .001$
ACQ-R	37.53 (13.55)	300	32.27 (12.18)	157	43.30 (12.63)	144	$t(298) = -7.69$, $p < .001$
AAQ-II	38.76 (13.10)	302	44.44 (12.00)	158	32.52 (11.33)	144	$t(300) = 8.85$, $p < .001$

Table 7.2 continued

Variable	Pooled sample		HP participants		NP participants		Test statistics
	M (*SD*)	*N*	*M* (*SD*)	*N*	*M* (*SD*)	*N*	
Impulsivity							
UPPS-URG	2.72 (0.62)	307	2.92 (0.57)	163	2.49 (0.59)	144	$t(305) = 6.71, p < .001$
UPPS-PREM	2.06 (0.52)	307	2.04 (0.53)	163	2.08 (0.51)	144	$t(305) = -.74, p = .460$
UPPS-PERS	2.30 (0.54)	307	2.41 (0.57)	163	2.18 (0.48)	144	$t(304.24) = 3.75, p < .001$[b]
Perfectionism							
OBQ-PC	63.56 (21.75)	318	70.87 (21.07)	173	54.84 (19.24)	145	$t(316) = 7.03, p < .001$
Self-esteem							
RSE	17.56 (7.35)	300	14.96 (7.14)	156	20.37 (6.52)	144	$t(298) = -6.83, p < .001$

Note. MGHHPS = Massachusetts General Hospital Hair Pulling Scale; MIST-A = Milwaukee Inventory for Subtypes of Trichotillomania – Adult version; DASS-A = Depression Anxiety Stress Scales-Anxiety; DASS-D = Depression; DERS = Difficulties in Emotion Regulation Scale; DTS = Distress Tolerance Scale; ACQ-R = Anxiety Control Questionnaire-Revised; AAQ-II = Acceptance and Action Questionnaire-II; UPPS-URG = Urgency, Premeditation, Perseverance, Sensation-Seeking Impulsive Behaviour Scale-Urgency; UPPS-PREM = Premeditation (lack of); UPPS-PERS = Perseverance (lack of); OBQ-PC = Obsessive Beliefs Questionnaire-Perfectionism/Certainty subscale RSE = Rosenberg Self-Esteem scale.

[a]DASS-D scores were square root transformed for the independent samples *t* test. [b]Equal variances not assumed.

Table 7.3 presents the frequency of bodily areas from which hair was pulled among HP participants. These participants pulled hair from an average of 2.61 bodily areas (range = 1 – 8). The most frequently targeted hairpulling site was the scalp (61.7%), followed by the eyebrows (32.4%), pubic region (30.2%), and eyelashes (29%), which is consistent with the most frequently reported hairpulling sites in other internet-surveyed TTM samples (e.g., Woods, Flessner, et al., 2006).

Table 7.3

Frequency of Targeted Hairpulling Sites among HP Participants (n = 259)

Hairpulling site	Frequency (%)
Scalp	158 (61.7)
Eyebrows	104 (32.4)
Eyelashes	69 (29)
Pubic region	77 (30.2)
Legs	39 (15.2)
Arms	23 (9)
Face	18 (5.5)
Torso	6 (2.4)
Other	6 (2)
Not reported/missing	55 (21.3)

Note. Percentages do not add up to 100 as multiple sites were recorded per participant. The number of "not reported/missing" hairpulling sites is partly influenced by a data collection error whereby participants were not required to report their hairpulling sites during the early stages of data collection.

7.2.3.2 Data screening and exploration. Statistical analyses were performed using SPSS version 22.0. Of the 421 participants in the EFA sample, 343 participants completed the BiTS and there were no missing data on this scale. Of the 343 participants with complete BiTS data, 194 (56.6%) endorsed non-cosmetic hairpulling

behaviours within the previous 12 months. The pooled sample of participants with and without non-cosmetic hairpulling behaviours therefore met recommendations of at least 300 participants and a higher participant-to-item ratio in order to conduct EFA (Costello & Osborn, 2005; Pett et al., 2003; Tabachnick & Fidell, 2007).

A small amount of missing data from MGHHPS (0.12% missing completely at random; MCAR), MIST-A (0.88% MCAR) and DASS-21 (0.07 % MCAR) were replaced using series mean substitution. Square root transformations were applied to the positively skewed DASS-A, DASS-D, and relevant DERS subscales, which restored normality (i.e., skew/kurtosis ratios < 3).

Histogram inspection of MGHHPS scores revealed a bimodal distribution, in which zero symptoms were reported in almost 13% of the sample and all other scores were negatively skewed. This pattern corresponded to 91% of the 34 NP participants with MGHHS data having reported zero hairpulling behaviours/urges in the past week (M = 0.18, SD = 0.72, range = 0 – 4), while most HP participants experienced symptom severity on a continuum ranging from moderate to severe (M = 17.60, SD = 5.44, range = 0 – 28). To correct for the negatively skewed MGHHPS data, scores were reversed before square root transformation was applied (Field, 2009; Tabachnick & Fidell, 2007). Transformation restored normality (i.e., skew/kurtosis ratios < 3).

Several BiTS items had high skewness and kurtosis ratios. Principal axis factoring (PAF) was therefore used as it has been shown to be a robust EFA method for non-normal data (Tabachnick & Fidell, 2007). Mahalanobis distance values identified nine potential multivariate BiTS outliers. Six outlying cases endorsed non-cosmetic hairpulling and were thus expected to report multiple extreme scores on BiTS items. As no suspected outliers exerted excessive influence according to Cook's distance (< 1)

and removal of outliers produced no substantive differences to EFA results, all cases were retained (Field, 2009; Tabachnick & Fidell, 2007).

7.2.3.3 Preliminary EFA. EFA using PAF was performed to determine the factor structure of the 50-item BiTS. As factors were expected to correlate with one another, oblique rotations (direct oblimin and promax) were applied during preliminary analyses. The Kaiser-Meyer-Olkin (KMO) measure verified the sampling adequacy for the analysis (KMO = 0.94; item-level measures of sampling adequacy range = 0.68 – 0.98). Bartlett's test of sphericity indicated that correlations between items were sufficiently large enough to conduct EFA [PAF, $\chi^2(1225) = 10179.41$, $p < .001$].

Preliminary analyses suggested retention of nine factors according to Kaiser's criterion of eigenvalues greater than 1, and between two and six factors according to scree plot inflexions. Horn's (1965) parallel analysis suggested five factors. Several factor analyses were therefore performed with different numbers of specified factors (specifically, three, four, and five), using both direct oblimin and promax rotations, to determine the most parsimonious solution (Pett et al., 2003). Following these analyses, and suggestions that Kaiser's criterion and Cattell's scree test typically overestimate the number of factors (Courtney, 2013), four factors were specified. Promax rotation was selected as it maximises simple structure by clarifying the relationships between varaibles (Tabachnick & Fidell, 2007).

Due to evidence of singularity between BiTS items 10 and 11, item 11 was excluded from subsequent analyses. In accordance with recommendations by Field (2009) and Pett et al. (2003), other items were excluded from analyses if the following conditions were met: communalities were less than 0.30 (five items); the item shared few inter-item correlations of 0.30 or higher (three items); or the item did not load onto

a factor at 0.40 or higher (five items). To reduce the total number of items in the final scale, 19 items with the lowest corrected item-total correlations were also excluded, provided that their exclusion improved or maintained scale reliability (Pett et al., 2003).

7.2.3.4 Final EFA. Using promax rotation, the 4-factor solution comprised 17 items and achieved simple structure (Thurstone, 1947). Each factor contained four items that featured relatively strong factor loadings (range = 0.50 – 0.90). At this stage, the factors represented Negative Self-Beliefs (factor 1; five items), Perfectionism/Control (factor 2; four items), Emotional Avoidance (factor 3; four items), and Low Self-Efficacy (factor 4; four items). However, the fourth factor had an eigenvalue less than one (0.96). Given that Kaiser's criterion has repeatedly been shown to over-estimate the number of factors (Courtney, 2013), Horn's (1965) parallel analysis was repeated on the 17 items and supported retention of only three factors in the final solution. Upon re-specifying a three-factor solution, two items no longer loaded onto any factors at 0.40 or higher. One item from Low Self-Efficacy ("If I cannot control something then there is no point in trying") loaded onto Negative Self-Beliefs (0.44) but was removed during reliability analyses due to its low corrected item-total correlation (Pett et al., 2003). The remaining Low Self-Efficacy item ("Trying to resolve my problems will only cause me more stress and hurt") now loaded onto Emotional Avoidance (0.52). At this stage, the Emotional Avoidance factor had five items but an item from the original 4-factor solution ("I should not have to rely on others to help me cope with my emotions and stress") now had the lowest factor loading (0.44). This item was removed from the factor as its deletion improved subscale reliability (Pett et al., 2003).

The final 3-factor solution comprised 13 items, which accounted for 67.73% of the variance (Table 7.4). Factor 1 accounted for 44.49% of the variance, and comprised five items reflecting low perceived self-worth, shame, and poor self-esteem. This

subscale was termed Negative Self-Beliefs (BiTS-NSB). Factor 2, termed Perfectionism/Control (BiTS-PC), comprised four items reflecting a desire to control experiences in order to achieve perfectionistic standards. Factor 3, termed Emotional Avoidance (BiTS-EA), comprised four items reflecting a preference to avoid acknowledging, identifying, and expressing unpleasant emotions. A copy of the final 13-item BiTS is included in Appendix AA, and the items are indicated in Table 7.4. Appendix BB features the table of secondary factor loadings.

Table 7.4

Final Factor Pattern Matrix for 13-item BiTS: Principal Axis Factoring with Promax Rotation (n = 343)

Item	**BiTS-NSB**	**BiTS-PC**	**BiTS-EA**
5. I do not like to think about my self-worth	0.92		
1. I do not feel comfortable with who I am	0.86		
4. I have much to feel embarrassed or ashamed about	0.85		
7. I think I am lacking or deficient in many positive qualities	0.68		
11. When I compare myself to others I think I'm less worthy than they are	0.67		
13. I experience strong urges to fix anything that I perceive to be wrong, imperfect or not-quite-right		0.79	
2. If I am unable to fix something so that it's perfect, I won't be able to stop thinking about it		0.79	
3. I become increasingly uncomfortable the longer I am unable to complete something I may have been working on		0.74	
9. I find that fixing something so that it's perfect is a very cleansing, gratifying experience for me		0.73	
8. I do not think it's appropriate or helpful to express my emotions or tell others how I feel			0.81
6. I am not good at talking about my emotions			0.75
12. I prefer to ignore or forget the things that are troubling me			0.54
10. Trying to resolve my problems will only cause me more stress and hurt			0.49
Eigenvalue	5.84	1.77	1.25
% of variance	44.49	13.65	9.59

Note. BiTS = Beliefs in Trichotillomania Scale; NSB = Negative Self-Beliefs; PC = Perfectionism/Control; EA = Emotional Avoidance.

7.2.3.5 Internal validity. Items in each factor were summed to achieve a total subscale score. A full-scale total score was also calculated. Factor scores (regression and Bartlett methods) correlated near-perfectly with summed subscale scores (r = .98 – 1.00), suggesting that the non-weighted, summed subscale scores were appropriate.

Table 7.5 provides the means, standard deviations, and Cronbach's alpha coefficients of each BiTS subscale and the total scale score for the pooled sample of HP and NP participants, and for participants separated by group. For the pooled sample in which the BiTS factors were derived, Cronbach's alpha coefficients for all subscales (α = 0.77 – 0.91) and the total scale (α = 0.90) ranged from acceptable to excellent (Nunnally, 1978). Internal consistency was also supported when participants were separated by group. Although the lowest Cronbach's alpha (0.72) was reported for the BiTS-EA subscale among HP participants, it is still within an acceptable range and likely reflects greater homogeneity of variance, as commonly found in clinical samples (Streiner, 2008).

Table 7.5

Means, (Standard Deviations), Cronbach's Alpha Coefficients and Inter-Correlations between the BiTS Subscale and Total Scale Scores

Subscale	Pooled sample (*n* = 343)		HP participants (*n* = 194)		NP participants (*n* = 149)	
	M (*SD*)	α	*M* (*SD*)	α	*M* (*SD*)	α
BiTS-NSB	19.97 (8.72)	0.91	23.48 (7.86)	0.87	15.40 (7.61)	0.88
BiTS-PC	18.72 (5.85)	0.85	20.73 (5.33)	0.83	16.10 (5.46)	0.80
BiTS-EA	14.29 (5.72)	0.77	15.52 (5.63)	0.72	12.70 (5.47)	0.80
BiTS total	52.98 (16.52)	0.90	59.72 (14.10)	0.85	44.20 (15.30)	0.90

Note. BiTS = Beliefs in Trichotillomania Scale; BiTS-NSB = Negative Self-Beliefs; BiTS-PC = Perfectionism/Control; BiTS-EA = Emotional Avoidance.

Inter-correlations among the BiTS subscales and total scale scores are presented for the pooled sample in Table 7.6.[2] BiTS-PC total scores were negatively skewed, so these were reversed and square root transformed to restore normality (i.e., skew/kurtosis ratios < 3) (Field, 2009; Tabachnick & Fidell, 2007). Negative correlations between BiTS-PC and other subscales should therefore be interpreted in a positive direction. In further support of the internal consistency of the BiTS, subscales were significantly correlated with each other and the total scale score. The moderate strength correlations (r = -.34 – .57)[3] between the three BiTS subscales suggest that they measure related but sufficiently distinct domains of TTM-relevant dysfunctional beliefs. The very strong

[2] BiTS inter-correlations separated by group (HP and NP participants) are shown in Appendix BB.

[3] As per Cohen (1988), correlations greater than .5 are considered large; those between .5 and .3 are considered moderate; and those between .3 and .1are considered small.

correlation (r = .90) between the BiTS-NSB and the total scale score reflects the large portion of variance accounted for by this factor.

Table 7.6

Inter-Correlations between BiTS Subscale Scores (n = 343)

Subscale	1.	2.	3.	4.
1. BiTS-NS	1	-.48*	.57*	.90*
2. BiTS-PC		1	-.34*	-.72*
3. BiTS-EA			1	.77*
4. BiTS total				1

Note. BiTS-PC scores are reversed and square root transformed. Negative correlations should therefore be interpreted in a positive direction.

*p < .01.

7.2.3.6 Construct validity. Correlations between each of the BiTS subscales and a range of psychological measures were conducted to investigate convergent and divergent validity with other constructs within the pooled sample (Table 7.7).

Table 7.7

Pearson Correlations between BiTS Subscales and Other Constructs

Measure	BiTS-NSB	BiTS-PC	BiTS-EA	*M*	*SD*	*N*
RSE	-.85*	.37*	-.54*	17.56	7.35	300
OBQ-PC	.61*	-.74*	.37*	63.56	21.75	318
AAQ-II	.80*	-.47*	.55*	38.76	13.10	302
DTS	-.60*	.44*	-.38*	2.93	0.88	291
ACQ-SC	-.53*	.42*	-.32*	9.93	4.40	300
ACQ-TC	-.59*	.32*	-.25*	17.26	6.00	300
ACQ-EC	-.60*	.44*	-.37*	10.35	5.48	300
DERS-IM	.60*	-.45*	.38*	15.17	6.09	294
DERS-NA	.61*	-.37*	.47*	16.68	6.61	294
DERS-G	.52*	-.42*	.28*	16.72	5.23	294
DERS-AE	.28*	-.01	.34*	15.60	4.70	294
DERS-S	.72*	-.45*	.49*	21.65	8.42	294
DERS-C	.57*	-.30*	.51*	12.37	4.21	294
UPPS-URG	.56*	-.41*	.34*	2.72	0.62	307
UPPS-PREM	-.03	.23*	-.02	2.06	0.52	307
UPPS-PERS	.35*	.09	.30*	2.30	0.54	307

Note. BiTS = Beliefs in Trichotillomania Scale; BiTS-NSB = Negative Self-Beliefs; BiTS-PC = Perfectionism/Control; BiTS-EA = Emotional Avoidance; RSE = Rosenberg Self-Esteem scale; OBQ-PC = Obsessive Beliefs Questionnaire-Perfectionism/Certainty subscale; AAQ-II = Acceptance and Action Questionnaire-II; DTS = Distress Tolerance Scale; ACQ-SC = Anxiety Control Questionnaire-Stress Control; ACQ-TC; Threat Control; ACQ-EC = Emotional Control; DERS-IM = Difficulties in Emotion Regulation Scale-Impulsivity; DERS-NA = Non-Acceptance; DERS-G = Goals; DERS-AE = Awareness of Emotion; DERS-S = Strategies; DERS-C = Clarity; UPPS-URG = Urgency, Premeditation, Perseverance, Sensation-Seeking Impulsive Behaviour Scale-Urgency; UPPS-PREM = Premeditation (lack of); UPPS-PERS = Perseverance (lack of).

BiTS-PC (reversed), DERS-IM and –C means and standard deviations are untransformed; correlations are square root transformed.

*$p < .01$.

The BiTS-NSB subscale shared moderate to high positive correlations with most other scales, suggesting that general low self-esteem and self-worth is associated with constructs involving the regulation, control, avoidance, and tolerance of negative emotions. Importantly, the strongest correlation with the BiTS-NSB subscale was with RSE scores (r = -.85), supporting its convergent validity as a measure of negative self-evaluations relating to worth and esteem. The BiTS-PC similarly shared moderate strength positive correlations with several other constructs that are suggestive of the role of perfectionism and control in emotion regulation constructs. Importantly, the BiTS-PC subscales' strongest correlation (r = -.74) was with the OBQ-PC, which similarly measures the role of perfectionism and a need for certainty relevant to obsessive-compulsive phenomena. The BiTS-EA shared low to moderate strength correlations with most scales except the UPPS-PREM, indicating that emotional avoidance is not related to a lack of premeditation as a form of impulsivity. Its highest correlations were with the AAQ-II (r = .55), RSE (r = -.54), ACQ-TC (r = -.52), and DERS-C (r = .51). This suggests that the BiTS emotional avoidance construct is related to experiential avoidance (AAQ-II), low perceptions of threat control (ACQ-TC), and poor clarity of emotional experience (DERS-C).

7.2.3.7 Relationship with TTM and other symptoms. To test the hypothesis that TTM-relevant beliefs would be associated with TTM symptoms, zero-order Pearson's correlations were reported between the BiTS subscales and TTM symptom measures (MGHHPS, MIST-A; Table 7.8).

As expected, hairpulling severity experienced in the previous week as measured by the MGHHPS was significantly and moderately correlated with TTM-relevant beliefs, as measured by the BiTS subscales (r = -.29 – -.48, p < .01). Moreover, focused

hairpulling was significantly associated with TTM-relevant beliefs (r = .21 – .30, p < .01) whereas automatic hairpulling was not (r = .05 – .14, p > .05).

Table 7.8

Zero-order Pearson's Correlations between the BiTS, MGHHPS, MIST-A, and DASS-21 Scores

Variable	MGHHPS	MIST-A Automatic	MIST-A Focused	DASS-D	DASS-A
BiTS-NSB	-.48**	.05	.30**	.76**	.61**
BiTS-PC	.30**	-.10	-.23**	-.46**	-.50**
BiTS-EA	-.29**	.14	.21*	.53**	.46**
BiTS total	-.47**	.12	.33**	.75**	.66**
MGHHPS	1	-.19**	-.27**	-.45**	-.39**
MIST-A Automatic		1	.00	.08	.14*
MIST-A Focused			1	.27**	.23*
DASS-D				1	.72**
DASS-A					1
M	15.44	27.35	47.23	6.91	5.43
SD	7.69	9.01	16.29	5.85	4.88
N	274	227	227	334	334

Note. BiTS = Beliefs in Trichotillomania Scale; BiTS-NSB = Negative Self-Beliefs; BiTS-PC = Perfectionism/Control; BiTS-EA = Emotional Avoidance; RSE = Rosenberg Self-Esteem scale; MGHHPS = Massachusetts General Hospital Hair Pulling Scale; MIST-A = Milwaukee Inventory for Subtypes of Trichotillomania-Adult version; DASS-A = Depression Anxiety Stress Scales-Anxiety; DASS-D = Depression.

BiTS-PC (reversed), MGHHPS (reversed) and DASS scales means and standard deviations are untransformed; correlations are square root transformed. Due to BiTS-PC and MGHHPS score reversal, negative correlations should be interpreted in a positive direction.

*$p < .05$, **$p < .01$.

Given the moderate-to-strong correlations shared between BiTS subscales and TTM severity with depression and anxiety symptoms, a hierarchical regression analysis was performed to determine if TTM-relevant cognitions could predict hairpulling severity over and above depression and anxiety. Depression and anxiety were entered in the first step, followed by the three BiTS subscales (Table 7.9). Results are for the pooled sample. All assumptions for conducting hierarchical regression were met.

Controlling for depression and anxiety, results of the hierarchical regression indicated a significant R^2 change after the addition of the BiTS scales in the prediction of hairpulling severity as measured by the MGHHPS [$F(5, 215) = 14.96$, $p < .001$]. Specifically, TTM-relevant beliefs accounted for an additional 5% of the variance in hairpulling severity beyond that explained by depression and anxiety symptoms. The BiTS-NSB was the only significant predictor of hairpulling severity when all other variables were held constant, accounting for over half (2.69%) of the unique variance explained by TTM-relevant beliefs. Combined, all variables accounted for 25.8% of the variance in hairpulling severity.

Table 7.9

Hierarchical Regression Analysis Predicting TTM Symptoms (MGHHPS) with TTM-relevant Cognitions (BiTS), Controlling for Depression and Anxiety (DASS-21)

Step	**Predictors**	***B***	**S.E *B***	**β**
1				
	Constant	4.67	1.57	
	DASS-A	-0.09	0.086	-.10
	DASS-D	-.34	0.08	-.38**
2				
	Constant	4.46	0.42	
	DASS-A	-0.04	0.09	-.05
	DASS-D	-0.14	0.10	-.16
	BiTS-NSB	-0.03	0.01	-.26*
	BiTS-PC	0.12	0.08	.10
	BiTS-EA	-0.01	0.01	-.04

Note. DASS-A = Depression Anxiety Stress Scales-Anxiety subscale; DASS-D = Depression subscale; BiTS = Beliefs in Trichotillomania Scale; BiTS-NSB = Negative Self-Beliefs; BiTS-PC = Perfectionism/Control; BiTS-EA = Emotional Avoidance; RSE = Rosenberg Self-Esteem scale. MGHHPS (reversed), BiTS-PC (reversed) and DASS scale scores are square root transformed.

$R^2 = .21$ for Step 1, $\Delta R^2 = .05$ for Step 2 ($p = .003$).

*$p < .01$, **$p < .001$.

7.2.3.8 Group comparisons. It was hypothesised that HP participants would endorse significantly greater TTM-relevant cognitions as measured by the BiTS than NP participants, controlling for depression and anxiety symptoms. The assumption of homogeneity of regression slopes was violated for the interaction between several BiTS scales and both proposed covariates (DASS-D, DASS-A), meaning ANCOVA could not be performed. One-way ANOVA was instead performed on each variable of interest to at least determine group differences, but without the ability to control for depression or anxiety. Kruskal-Wallis tests were performed for BiTS-PC and DASS-A scores because homogeneity of variance was violated for these variables. Results are shown in Table 7.10.

As anticipated, HP participants scored significantly higher on each of the BiTS subscales and the total scale than did NP participants. Besides the small effect size (r = 0.2) reported between groups on the BiTS-PC subscale, all other BiTS scores differed between groups with a moderate-to-large effect size (ω^2 = .05 – .22)[4]. Additionally, HP participants reported significantly greater depression and anxiety symptoms than NP participants, although the magnitude of this difference was very small for anxiety (ω^2 = .02).

[4]As per Kirk (1996), omega squared (ω^2) magnitudes greater than .14 are considered large; those between .14 and .06 are considered moderate; and those between .06 and .01are considered small.

Table 7.10

Comparisons between HP and NP Participants' Scores on Depression, Anxiety, TTM and BiTS Subscale Measures

Variable	Test Statistic
BiTS-NSB	$F(1, 341) = 91.59, p < .001, \omega^2 = .21$
BiTS-PC	$\chi^2(1, n = 343) = 55.99, p < .001, r = .02$
BiTS-EA	$F(1, 341) = 21.55, p < .001, \omega^2 = .05$
BiTS total	$F(1, 341) = 94.80, p < .001, \omega^2 = .21$
DASS-D	$F(1, 341) = 94.48, p < .001, \omega^2 = .22$
DASS-A	$\chi^2(1, n = 334) = 50.47, p < .001, r = .02$

Note. BiTS = Beliefs in Trichotillomania Scale; NSB = Negative Self-Beliefs; PC = Perfectionism/Control; EA = Emotional Avoidance; DASS-A = Depression Anxiety Stress Scales-Anxiety; DASS-D = Depression.

DASS-D scale scores were square root transformed to perform ANOVA. BiTS-PC and DASS-A scores were not square root transformed because the non-parametric alternative to ANOVA was utilised (Kruskal-Wallis test).

7.2.4 Discussion. This study presented the development, exploratory factor analysis (EFA), and psychometric evaluation of the Beliefs in Trichotillomania Scale (BiTS), a 13-item measure reduced from an initial pool of 50 items designed to reflect the six domains of TTM-relevant beliefs identified in a preliminary qualitative investigation (Study 1, Chapter 6).

Results of the EFA suggested that three factors provided the most parsimonious solution of the BiTS. Factor 1 was labelled Negative Self-Beliefs (BiTS-NSB), and was

comprised of five items reflecting generally low perceived self-worth, shame, and low self-esteem. This factor accounted for the greatest amount of variance (44.5%) within the original set of 50 items, highlighting its relative importance. Factor 2 was a combination of three items designed to reflect perfectionistic standards and one item designed to reflect permission-giving cognitions ("I become increasingly uncomfortable the longer I am unable to complete something I may have been doing or working on"). This item was initially considered a permission-giving cognition on the basis that it reflected an all-or-nothing style of rationalising hairpulling, as reported by several participants within the qualitative study. However, in combination with the items reflecting perfectionism, the cognitive-affective process highlighted within this set of four items was one of achieving a sense of control via achievement of perfectionistic standards. Hence, factor 2 was named Perfectionism/Control (BiTS-PC). Finally, factor 3 was comprised of two items designed to reflect beliefs about negative emotions and two items designed to reflect control beliefs. Again, interpretation of the cognitive-affective process apparent within the item set was one of avoiding negative emotions, and difficulties with identifying or expressing such emotions. Hence, factor 3 was named Emotional Avoidance (BiTS-EA).

The overall BiTS and its subscales demonstrated acceptable to excellent internal consistency for the pooled sample, and for the HP and NP groups, separately. The subscales were significantly correlated with each other (r = -.34 – .57, p < .01), as expected, but not so strongly to suggest that they reflected the same construct (i.e., insufficient discriminant validity). The BiTS-NSB and BiTS-PC subscales demonstrated the strongest convergent validity. For instance, the BiTS-NSB exhibited a very strong relationship with low self-esteem (RSE), but also with experiential avoidance (AAQ-II). This can be explained by findings that suggest a strong relationship between these

constructs; presumably because experiential avoidance can be employed as a self-esteem regulation strategy, and that individuals with low self-esteem are more likely to employ experiential avoidance as a regulatory strategy (Udachina, Thewissen, Myin-Germeys, Fitzpatrick, O'Kane, & Bentall, 2009). Relatedly, the highest loading BiTS-NSB item refers to a discomfort with contemplating one's self-worth ("I do not like to think about my self-worth"), which could reflect a preference to avoid potentially distressing corresponding cognitions or emotions. As others have suggested, factors that moderate the relationship between TTM and self-esteem require future research (Scott & Stevenson, 2015), and experiential avoidance may be one such relevant factor to investigate.

Support for the construct validity of the BiTS-PC suscale was derived from its strong correlation (r = -.74, p < .01) with the OBQ-PC, a measure of the need for perfectionism and certainty in OCD (OCCWG, 2001, 2005). Correlations between BiTS-PC and several other emotion regulation constructs (AAQ-II, DTS, DERS, ACQ-R) were of moderate strength. While not so high to suggest poor discriminant validity, these relationships can be interpreted as perfectionism operating as an emotion regulation strategy centred on self-regulation (i.e., control). For instance, motivation to achieve a sense of control entails manipulating situations or events to avoid failure and achieve desired outcomes (Burger & Cooper, 1979). In doing so, achieving control means that emotions associated with the experience of failure or uncertainty (e.g., fear, disappointment) can be avoided. Scores on the FMPS and DERS have previously been found to have a significant correlation (r = -.43) among 24 participants with BFRBs (Roberts et al., 2015); notably, the magnitude of this correlation is similar to those reported between BiTS-PC and DERS subscales reported here (average of r = -.42; see Table 7.7).

The BiTS-EA demonstrated moderate-to-large correlations with the AAQ-II, RSE, ACQ-TC, and DERS-C (range of r = .51 – .55). This was supportive of its construct validity as a measure of avoiding the experience and verbal expression of negative emotions. However, it also featured significant moderate strength correlations with all other measures, excepting a lack of premeditation as a facet of impulsivity (UPPS-PREM r = -.02). Of the three subscales, the BiTS-EA arguably has the weakest support for its construct validity, given that establishing construct validity is largely "a matter of showing that alternative or competing inferences do not destroy the intended interpretation" (Guion, 1980, p. 390). Based on its limited evidence of divergent validity, the BiTS-EA appears to reflect an amalgamation of experiential avoidance, distress intolerance, emotion dysregulation, and low self-efficacy for coping with and expressing emotion. The BiTS-EA additionally reflects a *verbal* component to emotion-focused coping that was not anticipated to be represented in the BiTS factor structure (e.g., "I am not good at talking about my emotions"). Given preliminary evidence for the role of alexithymia in TTM (Rufer et al., 2014), it may be of interest for future research to evaluate the BiTS-EA construct validity in the context of alexithymia, and indeed, to further investigate the relationship between alexithymia and TTM in general.

The relationships between TTM symptoms and the BiTS subscales were also examined. Results supported the hypothesis that hairpulling severity (MGHHPS) would be associated with TTM-relevant beliefs (BiTS). Specifically, there were significant moderate correlations between hairpulling severity and all BiTS subscales, with the strongest relationship being for the BiTS-NSB (r = -.48, p < .01). Also as expected, higher levels of focused hairpulling, but not automatic hairpulling, was significantly correlated with TTM-relevant beliefs to a small effect. Again, the strongest relationship was with negative self beliefs (BiTS-NSB r = .30, p < .01).

Controlling for depression and anxiety symptoms, a hierarchical regression analysis further demonstrated the importance of negative self-beliefs, with BiTS-NSB scores acting as the only significant predictor of hairpulling severity, over and above mood symptoms. Combined, TTM-relevant beliefs and mood symptoms accounted for almost 26% of the variance in hairpulling severity (although TTM-relevant beliefs uniquely accounted for only 5% of this variance above and beyond depression and anxiety). Finally, and as expected, the BiTS total scale and subscale scores differentiated participants who endorsed engaging in non-cosmetic hairpulling behaviours from those who did not. However, controlling for mood symptoms was not possible with these analyses and the effect size for the group difference in BiTS-PC scores was small.

These findings provide quantitative support for the qualitative results of Study 1 (Chapter 6), and for the overarching thesis that dysfunctional cognitions and beliefs are associated with TTM symptoms. Additionally, these findings contribute to the growing empirical literature that suggests negative self-evaluations (including shame-related cognitions), perfectionism, and negative appraisals of one's capacity for emotion-focused coping and regulation are implicated in TTM (Diefenbach, Tolin, Hannan, et al., 2005; Norberg et al., 2007; Roberts et al., 2013, 2015; Scott & Stevenson, 2015). The significant correlations between TTM-relevant beliefs and focused hairpulling also offers support to Flessner, Woods and colleague's (2008) operationalisation of focused hairpulling as being specifically initiated by negative internal states *including* cognitions, whereas automatic hairpulling is defined as having no association with specific internal states. Lastly, the fact that negative self-beliefs predicted hairpulling severity over and above mood symptoms (although only for a small portion of the variance) supports the tentative suggestion made in Study 1 (Chapter 6) that negative

self-beliefs play a central role as triggers of hairpulling episodes. Furthermore, it challenges suggestions that negative self-evaluations may only be relevant to TTM via the presence of comorbidities such as mood disorders (e.g., Franklin & Tolin, 2007).

Despite some promising preliminary findings in support of the factor structure and validity of the BiTS, and its relationship to TTM symptoms, additional research is required. Instrument development is a multiphasic task; once EFA has defined the internal structure of a measure, CFA is typically utilised to confirm the validity and reliability of that factor structure in a new sample (Pett et al., 2003). For the BiTS, confirming its factor structure is particularly important as a key limitation to the current study was the use of a pooled sample of participants who did and did not endorse perceived difficulties with non-cosmetic hairpulling.

There is evidence to suggest that, analogous to OCD symptoms, hairpulling urges and behaviours range on a continuum from normal to pathological in student and community samples (Ghisi et al., 2013; Stanley et al., 1994, 1995). However, possibly due to a data collection error with NP participants' MGHHPS scores, the current study was unable to demonstrate such a continuum in the pooled sample. Constructs similar to those represented in the BiTS factor structures (e.g., self-esteem, perfectionism, experiential avoidance) are nevertheless considered to vary in severity across non-clinical and clinical populations (Frost et al., 1990; Hayes et al., 1996; Rosenberg, 1965). Additionally, protecting against range restriction is important for scale development; as Worthington and Whittaker (2006, p. 816) recommended, "it is not necessary to closely represent any clearly identified population as long as those who would score high and those who would score low are well represented." Nevertheless, it will be imperative to perform CFA to replicate the BiTS factor structure in a new pooled sample (i.e., to evaluate its generalisability), and to additionally perform multi-

group CFA to determine that the measurement model is stable for both HP and NP participants, separately. This was the focus of Study 3.

7.3 Study 3: Confirmatory Factor Analysis

7.3.1 Introduction. The previous study provided support for the association between dysfunctional cognitions and TTM symptoms; a relationship that has typically received limited theoretical consideration and empirical research (e.g., Franklin & Tolin, 2007; Mansueto et al., 1997; Norberg et al., 2007), but has recently been subject to greater interest and investigation (e.g., Roberts et al., 2015; Scott & Stevenson, 2015). Using EFA to examine the factor structure of a 50-item pool of TTM-relevant beliefs in a combined sample of participants who either did or did not endorse non-cosmetic hairpulling behaviours, a 13-item measure (the BiTS) was derived and represented three domains of beliefs: negative self-beliefs, a desire for perfectionism and control, and a preference to avoid experiencing and expressing negative emotions. The study provided preliminary evidence for the reliability and validity of the BiTS, and was able to effectively discriminate between HP and NP participants. HP participants reported significantly greater scores on the BiTS across all three beliefs domains, although only negative self-beliefs were found to predict hairpulling severity as measured by the MGHHPS, when controlling for depression and anxiety symptoms.

While these findings are promising, their interpretation must be tempered by the exploratory nature of the factor analysis and the fact that the BiTS factor structure was derived from a pooled sample in which 43% of participants did not endorse perceived problems with non-cosmetic hairpulling. The aim of Study 3 was therefore to further evaluate the factor structure, internal consistency, and construct validity of the 13-item BiTS in a new sample of participants with and without self-reported non-cosmetic

hairpulling. CFA enables this kind of evaluation as it tests the goodness of fit of the measurement model derived from EFA; in other words, it is a hypothesis-testing technique (Tabachnick & Fidell, 2007). Additionally, multi-group CFA enables simultaneous evaluation of model equivalency (i.e., invariance) across two groups by constraining various model parameters to equality in both groups (Cunningham, 2008). Multi-group CFA would therefore evaluate the validity of the BiTS factor structure in HP and NP participants, separately. In this study, it was hypothesised that CFA would support the validity of the inter-correlated 3-factor BiTS model in a new pooled sample of HP and NP participants (i.e., the model would provide an adequate fit to the pooled data). Additionally, it was anticipated that multi-group CFA would demonstrate that the BiTS model provides an adequate fit to the data of HP and NP participants, separately. Consistent with Study 2 findings, the internal consistency of the BiTS was expected to be supported for pooled and separated samples.

The current study also aimed to evaluate the relationships between TTM-relevant beliefs and TTM symptoms, and to determine the relative contribution of TTM-relevant beliefs to hairpulling severity while controlling for depression and anxiety. As per Study 2, it was hypothesised that greater endorsement of TTM-relevant beliefs, as measured by the BiTS, would be significantly and positively correlated with hairpulling severity, over and above depression and anxiety. Additionally, it was hypothesised that BiTS scores would be significantly and positively correlated with focused hairpulling, but not automatic hairpulling. Finally, it was anticipated that after controlling for depression and anxiety symptoms, HP participants would report significantly greater BiTS scores than NP participants.

7.3.2 Method.

7.3.2.1 Participants. For details of participant recruitment, refer to Study 2 (section 7.2.2.1). Table 7.11 presents the demographic characteristics of the CFA sample, which was comprised of 420 participants in total (M_{age} = 26.59, *SD* = 10.16). Demographics are shown for the pooled sample, and for participants with hairpulling behaviours (HP participants) and non-hairpulling participants (NP participants), separately.

Two-hundred and sixty eight (63.7%) participants in the CFA sample reported non-cosmetic hairpulling behaviours within the previous 12 months. On average, HP participants were aged 28.73 (*SD* = 10.77), and the majority (94.8%) were female. The 152 NP participants had a mean age of 22.79 (*SD* = 7.68) and 81.6% were female. HP participants were significantly older than NP participants [$t(394.19) = 6.56$, $p < .001$, equal variances not assumed], and there was a significantly greater proportion of females than males in the HP sample than in the NP sample [$\chi^2(1, n = 420) = 17.33$ (Yates Continuity Correction), $p < .001$, phi = -.21].

Table 7.11

Frequencies (%) for Participant Demographic Variables

Variable	Pooled sample (*N* = 420)	HP participants (*n* = 268)	NP participants (*n* = 152)
Gender			
Female	378 (90.0)	253 (94.8)	124 (81.6)
Male	42 (10.0)	14 (5.2)	28 (18.4)
Employment status			
Full-time	121 (28.8)	98 (33.7)	23 (15.1)
Part-time/casual	156 (37.1)	77 (28.8)	78 (51.3)
Retired	3 (0.7)	2 (0.7)	1 (0.7)
Unemployed	140 (33.3)	90 (33.7)	50 (32.9)
Education			
Secondary college	210 (50.0)	107 (40.1)	103 (67.8)
Vocational college	45 (10.7)	28 (10.5)	17 (11.2)
Undergraduate degree	107 (25.5)	85 (31.8)	22 (14.5)
Postgraduate degree	58 (13.8)	47 (17.6)	10 (6.6)
Marital status			
Single	278 (66.2)	166 (62.2)	111 (73.0)
Married	89 (21.2)	75 (28.1)	14 (9.2)
De facto	32 (7.6)	7 (2.6)	25 (16.4)
Divorced	21 (5.0)	19 (7.1)	2 (1.3)
Nationality			
Australia	185 (44.0)	51 (19.1)	134 (88.2)
United Kingdom & Ireland	33 (7.9)	26 (9.7)	7 (4.6)
North America	158 (37.6)	149 (55.8)	9 (5.9)
Central America	5 (1.2)	5 (1.9)	0 (0.0)
Canada	20 (4.8)	20 (7.5)	2 (1.3)
Europe & former USSR	7 (1.7)	5 (1.9)	0 (0.0)

Table 7.11 continued

Variable	Pooled sample (*N* = 420)	HP participants (*n* = 268)	NP participants (*n* = 152)
South East Asia & China	3 (0.7)	3 (1.1)	0 (0.0)
New Zealand & Pacific	3 (0.7)	3 (1.1)	0 (0.0)
Africa	2 (0.5)	2 (0.4)	0 (0.0)
Middle East	1 (0.2)	1 (0.4)	0 (0.0)
Not reported	3 (0.7)	3 (1.1)	0 (0.0)

7.3.2.2 Measures and procedure. This study used the same measures and procedure as used in Study 2.

7.3.3 Results.

7.3.3.1 Sample characteristics. Table 7.12 presents the means and standard deviations on measures of TTM symptoms, mood symptoms, and other variables of interest between groups. Similar to Study 2, HP participants endorsed significantly more severe hairpulling behaviours (MGHHPS), depression and anxiety symptoms (DASS-21), and greater difficulties with emotion regulation processes (DERS, ACQ-R, AAQ-II, DTS); a higher need for perfectionism/certainty (OBQ-PC); and reported poorer self-esteem (RSE) than did NP participants. HP participants reported a significantly greater sense of negative urgency than did NP participants, but there were no differences in terms of a lack of premeditation or lack of perseverence.

As noted for Study 2, during the early stages of data collection, NP participants were erroneously directed not to complete the MGHHPS, which resulted in only 34 of the 152 NP participants reporting data for this variable. NP participants with and

without MGHHPS scores did not significantly differ by age [t = -0.63(149), p = .531] or gender [χ^2 (1, n = 152) = 1.26 (Yates Continuity Correction), p = .169, phi = .11]. Note that the number of participants reporting data for each variable declines according to the placement of the measure in the survey battery as presentation of measures was not randomised (e.g., the DTS was completed by fewer participants as this was the last measure in the battery).

Table 7.12

Means, (Standard Deviations), and Group Differences on Symptom Measures and Self-regulation Variables

Variable	Pooled sample		HP participants		NP participants		Test statistic
	M (*SD*)	*N*	*M* (*SD*)	*N*	*M* (*SD*)	*N*	
TTM symptoms							
MGHHPS	15.30 (7.80)	280	17.37 (5.81)	246	0.32 (1.09)	34	$U = 45.0$, $z = -9.37$, $p < .001$
MIST-A Focused	-	-	43.88 (16.90)	230	-	-	-
MIST-A Automatic	-	-	27.12 (8.68)	230	-	-	-
Mood symptoms							
DASS-D	6.86 (5.76)	318	8.52 (5.72)	183	4.61 (5.00)	135	$t(316) = 7.17$, $p < .001$[a]
DASS-A	5.11 (4.59)	318	6.11 (4.66)	183	3.76 (4.14)	135	$t(316) = 5.45$, $p < .001$[a]
Emotion regulation							
DERS	95.78 (26.79)	277	101.96 (25.22)	147	88.80 (26.90)	135	$t(275) = 4.20$, $p < .001$
DTS	2.96 (0.99)	274	2.71 (0.98)	144	3.23 (0.95)	130	$t(272) = -4.39$, $p < .001$
ACQ-R	38.74 (13.25)	282	34.97 (12.31)	152	43.15 (12.00)	130	$t(280) = -5.42$, $p < .001$
AAQ-II	38.20 (12.90)	290	42.27 (11.96)	157	33.40 (12.33)	133	$t(288) = 6.20$, $p < .001$
Impulsivity							
UPPS-URG	2.65 (0.63)	292	2.84 (0.60)	159	2.43 (0.60)	133	$t(290) = 5.75$, $p < .001$
UPPS-PREM	2.02 (0.54)	292	2.00 (0.58)	159	2.05 (0.50)	133	$t(290) = -1.03$, $p = .304$
UPPS-PERS	2.23 (0.52)	292	2.27 (0.55)	159	2.19 (0.47)	133	$t(290) = 1.32$, $p = .189$

Table 7.12 continued

Variable	Pooled sample		HP participants		NP participants		Test statistic
	M (*SD*)	*N*	*M* (*SD*)	*N*	*M* (*SD*)	*N*	
Perfectionism							
OBQ-PC	64.46 (20.93)	302	69.71 (20.63)	169	57.78 (19.42)	133	$t(300) = 5.12, p < .001$
Self-esteem							
RSE	17.94 (7.24)	285	16.05 (7.06)	152	20.10 (6.82)	133	$t(283) = -4.90, p < .001$

Note. MGHHPS = Massachusetts General Hospital Hair Pulling Scale; MIST-A = Milwaukee Inventory for Subtypes of Trichotillomania – Adult version; DASS-A = Depression Anxiety Stress Scales-Anxiety; DASS-D = Depression; DERS = Difficulties in Emotion Regulation Scale; DTS = Distress Tolerance Scale; ACQ-R = Anxiety Control Questionnaire-Revised; AAQ-II = Acceptance and Action Questionnaire-II; UPPS-URG = Urgency, Premeditation, Perseverance, Sensation-Seeking Impulsive Behaviour Scale-Urgency; UPPS-PREM = Premeditation (lack of); UPPS-PERS = Perseverance (lack of); OBQ-PC = Obsessive Beliefs Questionnaire-Perfectionism/Certainty subscale RSE = Rosenberg Self-Esteem scale.

[a]DASS-D and DASS-A scores were square root transformed for the independent samples *t* test.

Table 7.13 presents the frequency of bodily areas from which hair was pulled among HP participants. These participants pulled hair from an average of 2.42 bodily areas (range = 1 – 8). The most frequently targeted hairpulling site was the scalp (58.2%), followed by the eyebrows (33.8%), eyelashes (26.1%), and the pubic region (21.3%). As noted in Study 2, these hairpulling sites have been reported to be the most frequently targeted sites in other internet-surveyed TTM samples (e.g., Woods, Flessner, et al., 2006).

Table 7.13

Frequency of Targeted Hairpulling Sites among HP Participants (n =268)

Hairpulling site	**Frequency (%)**
Scalp	153 (58.2)
Eyebrows	89 (33.8)
Eyelashes	70 (26.6)
Pubic region	56 (21.3)
Legs	26 (10)
Arms	24 (9.1)
Face	19 (7.2)
Torso	4 (1.6)
Other	5 (1.9)
Not reported/missing	68 (25.9)

Note. Percentages do not add up to 100 as multiple sites were recorded per participant.The number of "not reported/missing" hairpulling sites is partly influenced by a data collection error whereby participants were not required to report their hairpulling sites during the early stages of data collection.

7.3.3.2 Data screening and exploration. Statistical analyses were performed using SPSS version 22.0 and Analysis of Moment Structures software (AMOS version 22). Of 420 participants, 330 completed the BiTS and there were no missing data. Of the 330 participants with complete BiTS data, 194 (58.8%) endorsed non-cosmetic hairpulling behaviours within the previous 12 months. A small amount of missing data from the MGHHPS (0.12% MCAR), MIST-A (0.93% MAR) and DASS-21 (0.15% MCAR) were replaced using series mean substitution. Square root transformations were applied to positively skewed DASS-A, DASS-D, and relevant DERS subscales to restore normality (i.e., skew/kurtosis ratios < 3).

Similar to Study 1, MGHHPS scores formed a bimodal distribution, in which 88.2% of the 34 NP participants with this data having reported zero hairpulling behaviours and/or urges (M = 0.32, SD = 1.09, range = 0 – 5) while most HP participants experienced hairpulling severity on a continuum ranging from moderate to severe (M = 17.36, SD = 5.81, range = 0 – 28). As MGHHPS data were negatively skewed, scores were reversed before square root transformations were applied (Field, 2009; Tabachnick & Fidell, 2007). Transformation restored normality (i.e., skew/kurtosis ratios < 3).

Mardia's coefficient indicated significant multivariate kurtosis across BiTS items. Despite the removal of one multivariate outlier and application of transformations, normality was not improved. All remaining 329 cases were found not to exert excessive influence according to Cook's distance (< 1). The Bollen-Stine bootstrap p (Bollen & Stine, 1993) was therefore used as a post-hoc adjustment to correct standard errors and the chi-square (χ^2) estimator, as these can be inflated when using maximum likelihood (ML) estimation in situations of multivariate non-normality (Cunningham, 2008).

7.3.3.3 Model specification. CFA using ML was performed to test the goodness-of-fit of the 13-item, inter-correlated 3-factor BiTS structure, as established in Study 2. CFA was performed with structural equation modelling (SEM). As the χ^2 estimator has been found to reject too many true models when sample sizes are large and/or multivariate normality is not assumed (Cunningham, 2008; Ullman, 2007), several other fit indices and the adjusted Bollen-Stine *p* statistic were instead reported as recommended by Hu and Bentler (1998); namely, the comparative fit index (CFI; values ≥ 0.95 desirable), Tucker Lewis index (TLI; values ≥ 0.95 desirable), standardised root mean square residual (SRMR; values ≤ 0.08 desirable), and root mean square error of approximation (RMSEA; values ≤ 0.06 desirable). The χ^2/degrees of freedom ratio (χ^2/df) were also evaluated, with values < 2 indicative of good fit (Ullman, 2007).

The model was specified such that the three factors were inter-correlated and the first indicator (i.e., item) of each factor was set to unity in order to scale the latent variables (i.e., factors). The variances of the latent variables were not set to unity as this can result in incorrect standard errors when bootstrapping is applied (Cunningham, 2008). All other parameters were freely estimated. This model provided a near-acceptable fit to the data: $\chi^2/df = 2.93$; CFI = 0.94; TLI = 0.92; SRMR = 0.05; RMSEA = 0.08 [90% confidence interval (CI) = 0.06 – 0.09]; Bollen-Stine $p < .001$. Examination of modification indices suggested that the model could be improved by allowing error terms to covary between items 9 and 13 (BiTS-PC), and items 6 and 8 (BiTS-EA). The high standardised residual (2.81) between items 9 and 13 suggested that the model was failing to account for much of the shared variance between this item pair (Cunningham, 2008), and the similar phrasing used in these two items (i.e., a need to "fix" things) further justified the correlation of their error terms. The theoretical construct of emotional expression captured by items 6 and 8 warranted the correlation

of their error terms, thereby ensuring that the model sufficiently accounted for their shared variance.

7.3.3.4 Model re-specification and evaluation. The model was re-specified to allow the error terms of items 9 and 13, and items 6 and 8, to covary (see Figure 7.1). This model provided excellent fit to the data: χ^2/df = 1.54; CFI = 0.98; TLI = 0.98; SRMR = 0.03; RMSEA = 0.04 [90% CI = 0.02 – 0.06]; Bollen-Stine p = .315. At this stage, all standardised residual covariances were < 2, suggesting that the model was accounting for sufficient shared variance among all item pairs. Given the substantial drop in χ^2/df by comparison to the unspecified model, this was taken to indicate that a real improvement to the model was achieved by allowing the error terms of two item pairs to covary, and that this post-hoc improvement in fit was not "capitalising on chance" (Jöreskog & Sörbom, 1996, p. 29). Factor inter-correlations ranged from .56 (BiTS-NSB – BiTS-PC and BiTS-PC – BiTS-EA) to .76 (BiTS-NSB – BiTS-EA), indicating large inter-correlations between the factors, as was expected.

The re-specified model was tested for invariance between HP participants (n = 193) and NP participants (n = 136), following the stepwise procedure outlined by Cunningham (2008). Participant numbers in each group satisfied recommendations of between five and 10 participants per indicator (i.e., item) or between at least 100 to 200 participants when conducting CFA (Worthington & Whittaker, 2006). Configural invariance was first estimated in each group separately to determine that the data fit the same model structure (i.e., configuration) in each group. Among HP participants, model fit was excellent: χ^2/df = 1.31; CFI = 0.98; TLI = 0.98; SRMR = 0.05; RMSEA = 0.04 [90% CI = 0.00 - 0.06]. Model fit was also acceptable among NP participants: χ^2/df = 1.71; CFI = 0.95; TLI = 0.94; SRMR = 0.05; RMSEA = 0.07 [90% CI = 0.05 – 0.10].

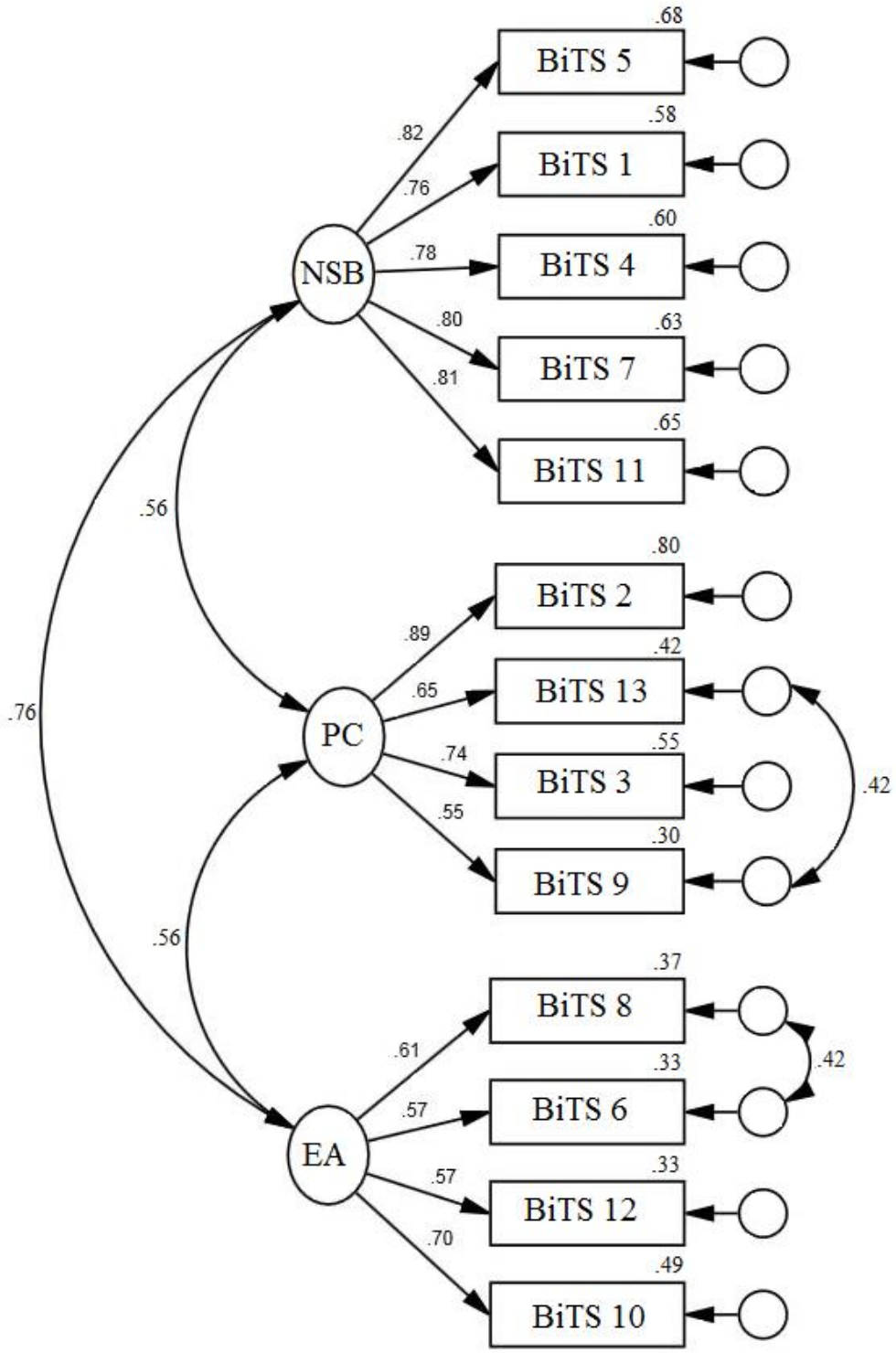

Figure 7.1. Re-specified CFA path model displaying standardised regression weights.

Group comparisons of unstandardised coefficients suggested that items 1 (BiTS-NSB), 2 (BiTS-PC) and 10 (BiTS-EA) be constrained to equality for multiple group CFA. Multi-group CFA was performed to simultaneously estimate the model parameters of each group, and determine the fit and validity of the model as parameters were increasingly constrained to equality across groups. Model fit and nested model comparisons are summarised in Table 7.14.

The simultaneously-tested, unconstrained configural model (test 1, Table 7.14) fit the data well. This model acted as the baseline model to which increasingly constrained models were compared. Assuming this model to be correct, the model in which measurement weights were constrained to be equal across groups (test 5) was also supported as model fit did not significantly deteriorate (p = .783). In other words, factor loadings were found to be equivalent between HP participants and NP participants, which supported the measurement invariance of the BiTS.

Assuming the constrained measurement weights model to be correct (as per test 5), structural covariances (test 6) were found to significantly differ across groups, however. Similarly, when structural covariances (test 3) and measurement intercepts (test 4) were constrained to be equal across groups, these models were found to have a very near-acceptable fit to the data. These results suggest that HP and NP participants interpret the three BiTS factor constructs in the same way (i.e., measurement invariance was supported), but the *relationships* these constructs share differ between the groups. Assuming the constrained measurements model to be correct, examination of factor inter-correlations among each group separately suggested that NP participants perceived a strong relationship between negative self-beliefs (BiTS-NSB) and emotional avoidance (BiTS-EA) (r = .91) whereas this relationship was attenuated among HP participants (r = .68).

Due to an insufficient number of male participants with BiTS data (n = 34), invariance testing between males and females was not possible.

Table 7.14

Model Fit Indices and Nested Model Comparisons for Invariance Tests

Invariance test	**χ^2(df)**	**χ^2/df**	***p***	**CFI**	**TLI**	**SRMR**	**RMSEA (90% CI)**
Model Fit							
1. Unconstrained full configural invariance	181.42 (120)	1.51	-	.97	.96	0.05	0.04 (0.03 – 0.05)
2. Constrained equal measurement weights	187.79 (130)	1.45	-	.97	.96	0.05	0.04 (0.02 – 0.05)
3. Constrained equal structural covariances	212.90 (136)	1.98	-	.96	.95	0.06	0.04 (0.03 – 0.05)
4. Constrained equal measurement intercepts	256.35 (151)	1.70	-	.94	.94	0.06	0.05 (0.04 – 0.06)
Nested Model Comparisons							
5. Measurement weights metric invariance	6.37 (10)	0.63	.783	-	-	-	-
6. Structural covariances model	25.11 (6)	6.20	.000	-	-	-	-

7.3.3.5 Internal validity. Items in each factor were summed to achieve a total subscale score. A full scale total score was also calculated. Table 7.15 provides the BiTS subscale and scale means, standard deviations, and Cronbach's alpha coefficients for the pooled sample and for participants separated by group. Cronbach's alpha coefficients for all subscales (α = 0.74 – 0.89) and the total scale (α = 0.89) ranged from acceptable to excellent (Nunnally, 1978). Internal consistency was also supported when participants were separated by group. As found in Study 2, the lowest Cronbach's alpha (0.72) was reported for the BiTS-EA subscale among HP participants, but it is still considered acceptable (Nunnally, 1978).

Table 7.15

Means, (Standard Deviations), Cronbach's Alpha Coefficients and Inter-Correlations between the BiTS Subscale and Total Scale Scores

Subscale	**Pooled sample (*n* = 329)**		**HP participants (*n* = 193)**		**NP participants (*n* = 136)**	
	M (*SD*)	α	*M* (*SD*)	α	*M* (*SD*)	α
BiTS-NSB	19.50 (8.56)	0.89	22.17 (8.11)	0.87	15.71 (7.73)	0.89
BiTS-PC	17.79 (6.18)	0.82	19.18 (6.04)	0.81	15.82 (5.87)	0.81
BiTS-EA	14.15 (5.70)	0.74	14.77 (5.85)	0.72	13.28 (5.38)	0.76
BiTS total	51.44 (16.76)	0.89	56.11 (15.80)	0.87	44.81 (15.90)	0.90

Note. BiTS = Beliefs in Trichotillomania Scale; BiTS-NSB = Negative Self-Beliefs; BiTS-PC = Perfectionism/Control; BiTS-EA = Emotional Avoidance.

Inter-correlations among the BiTS subscales and total scale scores are presented for the pooled sample[5] in Table 7.16. Unlike in Study 2, all BiTS subscale scores were normally distributed (i.e., skew/kurtosis ratios < 3). Subscales were significantly positively correlated with each other (r = .42 – .59, p < .01) and the total scale score (r = .75 – .89, p < .01), ranging in magnitude from moderate to very strong. The moderate correlations between the three BiTS subscales suggest that they measure related, but sufficiently distinct beliefs.

Table 7.16

Inter-Correlations between BiTS Subscale Scores (n = 329)

Subscale	1.	2.	3.	4.
1. BiTS-NS	1	0.47*	0.59*	0.89*
2. BiTS-PC		1	0.42*	0.75*
3. BiTS-EA			1	0.80*
4. BiTS total				1

Note. BiTS = Beliefs in Trichotillomania Scale; BiTS-NSB = Negative Self-Beliefs; BiTS-PC = Perfectionism/Control; BiTS-EA = Emotional Avoidance.

*p < .01.

7.3.3.6 Construct validity. Correlations between each of the BiTS subscales and a range of psychological measures were conducted to investigate convergent and discriminant validity with other constructs for the pooled sample (Table 7.17).

[5] BiTS inter-correlations separated by group (HP and NP participants) are shown in Appendix CC.

Table 7.17

Pearson's Correlations between BiTS Subscales and Other Constructs

Measure	BiTS-NSB	BiTS-PC	BiTS-EA	*M*	*SD*	*N*
RSE	-.80*	-.44*	-.46*	17.96	7.24	284
OBQ-PC	.55*	.72*	.47*	64.41	20.95	301
AAQ-II	.69*	.45*	.46*	38.14	12.88	289
DTS	-.57*	-.45*	-.38*	2.97	1.00	273
ACQ-SC	-.51*	-.37*	-.36*	10.22	4.32	281
ACQ-TC	-.53*	-.40*	-.51*	17.83	6.02	281
ACQ-EC	-.53*	-.46*	-.27*	10.77	5.76	281
DERS-IM	.46*	.31*	.36*	14.37	5.70	277
DERS-NA	.56*	.37*	.42*	16.24	6.77	277
DERS-G	.41*	.38*	.29*	16.47	5.21	277
DERS-AE	.34*	.07	.47*	15.29	4.95	277
DERS-S	.56*	.34*	.39*	21.24	8.36	276
DERS-C	.46*	.25*	.51*	12.05	4.18	277
UPPS-URG	.41*	.28*	.28*	2.65	0.62	291
UPPS-PREM	.01	-.16*	.07	2.02	0.54	291
UPPS-PERS	.28*	-.05	.28*	2.23	0.52	291

Note. BiTS = Beliefs in Trichotillomania Scale; BiTS-NSB = Negative Self-Beliefs; BiTS-PC = Perfectionism/Control; BiTS-EA = Emotional Avoidance; RSE = Rosenberg Self-Esteem scale; OBQ-PC = Obsessive Beliefs Questionnaire-Perfectionism/Certainty; AAQ-II = Acceptance and Action Questionnaire-II; DTS = Distress Tolerance Scale; ACQ-SC = Anxiety Control Questionnaire-Stress Control; ACQ-TC; Threat Control; ACQ-EC = Emotional Control; DERS-IM = Difficulties in Emotion Regulation Scale-Impulsivity; DERS-NA = Non-Acceptance; DERS-G = Goals; DERS-AE = Awareness of Emotion; DERS-S = Strategies; DERS-C = Clarity; UPPS-URG = Urgency, Premeditation, Perseverance, Sensation-Seeking Impulsive Behaviour Scale-Urgency; UPPS-PREM = Premeditation (lack of); UPPS-PERS = Perseverance (lack of).

DERS-IM mean and standard deviation is untransformed; correlations are square root transformed.

*$p < .01$.

As found in Study 2, the strongest correlation with the BiTS-NSB subscale was with the RSE (r = -.80), supporting its convergent validity as a measure of low self-esteem and worth. The BiTS-NSB shared moderate to high positive correlations with most other scales, which reinforces the association between low self-worth/esteem and constructs relating to emotion regulation. As found in Study 2, BiTS-PC shared its strongest correlation with the OBQ-PC (r = .72), providing convergent validity for the perfectionism construct it purportedly measures. The BiTS-PC also shared moderate strength positive correlations with several other constructs, suggestive of the role of perfectionism and control in distress tolerance and perceptions of anxiety control. As similarly found in Study 2, the BiTS-EA shared its highest correlations with the ACQ-TC (r = -.51), DERS-C (r = .51), DERS-AE (r = .47), and AAQ-II (r = .47). This suggests that the BiTS emotional avoidance construct is related to low perceived control of affective responding to threat (ACQ-TC), poor clarity and awareness of emotional experiences (DERS-C and DERS-AE, respectively), and experiential avoidance (AAQ-II). The BiTS-EA subscale also shared moderate correlations with OBQ-PC (r = .47) and RSE (r = -.46).

7.3.3.7 Relationship with TTM and other symptoms. To test the hypothesis that cognitions and beliefs would be associated with TTM symptoms, zero-order Pearson's correlations were reported between the BiTS subscales and TTM symptom measures (MGHHPS, MIST-A; Table 7.18). As expected, hairpulling severity experienced in the previous week, as measured by the MGHHPS, was significantly and moderately correlated with TTM-relevant beliefs, as measured by the BiTS subscales (r = -.27 – -.44, p < .01). Focused hairpulling was significantly positively associated with all three BiTS subscales (r = .17 – .26, p < .05 – .01) whereas automatic hairpulling was only significantly correlated with the BiTS-NSB subscale (r = .16, p < .05).

Similar to Study 2, TTM symptoms and the BiTS subscales shared moderate to large strength correlations with depression and anxiety symptoms. A hierarchical regression analysis was therefore performed to determine if TTM-relevant cognitions could predict hairpulling severity over and above depression and anxiety. Depression and anxiety symptoms were entered in the first step, followed by the three BiTS subscales (Table 7.19). All assumptions for conducting hierarchical regression were met.

Table 7.18

Zero-order Pearson's Correlations between the BiTS, MGHHPS, MIST-A, and DASS-21 Scores

Measure	MGHHPS	MIST-A Automatic	MIST-A Focused	DASS-D	DASS-A
BiTS-NSB	-.44**	.16*	.18**	.63**	.49**
BiTS-PC	-.31**	.14	.26**	.41**	.47**
BiTS-EA	-.27**	.12	.17*	.43**	.39**
BiTS total	-.44**	.18*	.25**	.62**	.56**
MGHHPS	1	-.31**	-.29**	-.46**	-.37**
MIST-A Automatic		1	.10	.05	.09
MIST-A Focused			1	.33**	.31**
DASS-D				1	.71**
DASS-A					1
M	15.28	27.15	43.73	6.86	5.10
SD	7.81	8.68	16.88	5.76	4.59
N	279	229	229	317	317

Note. BiTS = Beliefs in Trichotillomania Scale; BiTS-NSB = Negative Self-Beliefs; BiTS-PC = Perfectionism/Control; BiTS-EA = Emotional Avoidance; RSE = Rosenberg Self-Esteem scale; MGHHPS = Massachusetts General Hospital Hair Pulling Scale; MIST-A = Milwaukee Inventory for Subtypes of Trichotillomania-Adult version; DASS-A = Depression Anxiety Stress Scales-Anxiety; DASS-D = Depression.

DASS-D and DASS-A means and standard deviations are untransformed; correlations are square root transformed. MGHHPS scores are reversed and square root transformed, hence correlations are negative; a low MGHHPS score corresponds with more severe hairpulling behaviours.

*$p < .05$, **$p < .01$.

Controlling for depression and anxiety, results of the hierarchical regression indicated a significant R^2 change after the addition of the BiTS scales in the prediction of hairpulling severity [$F(5, 208) = 14.39$, $p < .001$]. Specifically, TTM-relevant beliefs accounted for an additional 4.2% of the variance in hairpulling severity beyond that explained by depression and anxiety symptoms. The BiTS-NSB was the only significant predictor of hairpulling severity when all other variables were held constant, accounting for over half (2.82%) of the unique variance explained by TTM-relevant beliefs. Combined, all variables accounted for 25.7% of the variance in hairpulling severity.

Table 7.19

Hierarchical Regression Analysis Predicting TTM Symptoms (MGHHPS) with TTM-relevant Cognitions (BiTS), Controlling for Depression and Anxiety (DASS-21)

Step	**Predictors**	***B***	**S.E *B***	**β**
1				
	Constant	4.70	0.16	
	DASS-A	-0.12	0.08	-.12
	DASS-D	-0.33	0.07	-.38*
2				
	Constant	5.16	0.24	
	DASS-A	-0.10	0.08	-.10
	DASS-D	-0.20	0.08	-.22*
	BiTS-NSB	-0.03	0.01	-.23**
	BiTS-PC	-0.02	0.01	-.08
	BiTS-EA	0.04	0.02	.30

Note. DASS-A = Depression Anxiety Stress Scales-Anxiety subscale; DASS-D = Depression subscale; BiTS = Beliefs in Trichotillomania Scale; BiTS-NSB = Negative Self-Beliefs; BiTS-PC = Perfectionism/Control; BiTS-EA = Emotional Avoidance; RSE = Rosenberg Self-Esteem scale. MGHHPS (reversed), DASS-D and DASS-A scale scores are square root transformed.

$R^2 = .22$ for Step 1, $\Delta R^2 = .04$ for Step 2 ($p = .009$).

*$p < .05$, **$p < .01$.

7.3.3.8 Group comparisons. It was hypothesised that HP participants would endorse significantly greater TTM-relevant cognitions as measured by the BiTS than NP participants, controlling for depression and anxiety symptoms. The assumption of homogeneity of regression slopes was violated for the interaction between several BiTS scales and both proposed covariates (DASS-D, DASS-A), meaning ANCOVA could not be performed to control for depression and anxiety symptoms. One-way ANOVA was instead performed on each variable of interest to at least determine group differences. All assumptions for performing ANOVA were met. Results are shown in Table 7.20.

Table 7.20

Comparisons between HP and NP participants' Scores on Depression, Anxiety, TTM, and BiTS Subscale Measures

Variable	Test Statistic
BiTS-NSB	$F(1, 327) = 52.48$, $p < .001$, $\omega^2 = .14$
BiTS-PC	$F(1, 327) = 25.30$, $p < .001$, $\omega^2 = .07$
BiTS-EA	$F(1, 327) = 5.50$, $p = .020$, $\omega^2 = .01$
BiTS total	$F(1, 327) = 40.64$, $p < .001$, $\omega^2 = .11$
DASS-D	$F(1, 315) = 40.64$, $p < .001$, $\omega^2 = .14$
DASS-A	$F(1, 315) = 29.13$, $p < .001$, $\omega^2 = .09$

Note. BiTS = Beliefs in Trichotillomania Scale; NSB = Negative Self-Beliefs; PC = Perfectionism/Control; EA = Emotional Avoidance; DASS-A = Depression Anxiety Stress Scales-Anxiety; DASS-D = Depression.

DASS-D and DASS-A scale scores were square root transformed to perform ANOVA.

As anticipated, HP participants scored significantly higher on each of the BiTS subscales and the total scale than did NP participants. Besides the small effect size (ω^2 = 0.01) reported between groups on the BiTS-EA scale, all other BiTS scores differed between groups, with a moderate to large effect size (ω^2 = .07 – .14). Additionally, HP participants reported significantly greater depression and anxiety symptoms than NP participants, with the size of these differences ranging from moderate to large (ω^2 = .09 – .14).

7.3.4 Discussion. This study aimed to further validate the factor structure of the BiTS in both pooled and separated samples of participants who did and did not endorse difficulties with non-cosmetic hairpulling; to provide further evidence of the internal consistency and construct validity of the BiTS; and as demonstrated in Study 2, to replicate associations between TTM-relevant beliefs (BiTS), and TTM symptoms (MGHHPS, MIST-A). Results of the CFA supported the hypothesis that the inter-correlated 3-factor model of the BiTS would be an adequate fit to the pooled data of HP and NP participants. The initial CFA of this model provided a very near-adequate fit to the data, but re-specifying the model to allow the error terms of two item-pairs to covary within the BiTS-PC and BiTS-EA factors substantially improved the model fit. While model re-specification is considered a reversal to an exploratory as opposed to a hypothesis-testing paradigm (Ullman, 2007), this was justified on the basis that the shared variance captured by these item pairs (as a result of their similar phrasing for conceptually related but distinct indicators) was not being sufficiently accounted for, and was resolved by allowing the relevant error terms to covary.

Moreover, when configural invariance was evaluated separately for each group prior to conducting multi-group CFA, the re-specified model was found to have an excellent fit to the data of HP participants and an adequate fit to the data of NP

participants. This was again supported when these models were simultaneously tested to establish unconstrained, full configural invariance as a baseline model (test 1, Table 7.14). In other words, both groups associated the same items with the same factors (i.e., constructs; Cheung & Rensvold, 2002). Given that the BiTS factors were derived from a pooled sample in Study 2, it is particularly reassuring that the configuration of items representing the three factors provides a better fit to the data among participants with self-reported non-cosmetic hairpulling difficulties than among NP participants.

Results of the multi-group CFA further established the model's equivalence between the groups; compared to the unconstrained, full configural (i.e., baseline) model, model fit did not significantly deteriorate (p = .783) when measurement weights were constrained to equality for both HP and NP samples (refer to test 5, Table 7.14). This indicated that measurement invariance was supported, meaning that the constructs represented within the BiTS were interpreted the same way in both groups (cf. Cheung & Rensvold, 2002). Structural covariances and measurement intercepts invariance was not supported but was very close to demonstrating adequate fit. This finding does not challenge the integrity of the BiTS measurement invariance across the groups, however; it simply suggests that the relationships between the BiTS subscales for HP and NP participants differ (cf. Cheung & Rensvold, 2002). For instance, when assuming the constrained measurements model to be correct, examination of the BiTS subscale inter-correlations revealed that NP participants reported a much stronger relationship (r = .91) between negative self-beliefs (BiTS-NSB) and emotional avoidance (BiTS-EA) than did HP participants (r = .68).

Given the limited number of males with complete BiTS data (n = 34), invariance testing between males and females was not possible. It will be necessary that future

research evaluates the equivalence of the BiTS model fit and configuration among men and women with TTM symptoms.

Replicating the findings of Study 2, the BiTS demonstrated acceptable to excellent internal consistency for the pooled sample, and for the HP and NP groups, separately. The subscales were significantly correlated with each other (r = .42 – .59) as expected, but not so strongly to suggest inadequate discriminant validity. The BiTS-NSB and BiTS-PC subscales demonstrated good construct validity with measures of low self-esteem (RSE) and perfectionism (OBQ-PC), respectively. The BiTS-EA demonstrated a lack of strong divergent validity as was reported in Study 2, but was nevertheless most strongly correlated with measures of experiential avoidance (AAQ-II), control of emotional reactivity (ACQ-TC), emotional clarity (DERS-C), emotional awareness (DERS-AE), and low self-esteem (RSE). These relationships are taken as further evidence of the BiTS-EA subscale as representing a preference to avoid experiencing and expressing negative emotion (which individuals with low self-esteem may be more likely to engage in; Udachina et al., 2009). As suggested in Study 2, future investigation of the association between BiTS-EA scores and alexithymia may further illuminate the construct of this subscale.

Also as expected, the BiTS total scale and subscale scores differentiated participants who reported engaging in non-cosmetic hairpulling behaviours from those who did not, with HP participants scoring significantly higher on all subscales than NP participants.

The relationship between TTM symptoms and the BiTS subscales was again examined, and the results largely replicated those of Study 2. Hairpulling severity (MGHHPS) significantly correlated with TTM-relevant beliefs, as hypothesised. Higher

levels of focused hairpulling was significantly associated with TTM-relevant beliefs with a small effect size ($r = .17 – .26$, $p < .01$), although the strongest relationship was now with perfectionism/certainty whereas it was with negative self-beliefs in Study 2. Also not found in Study 2 was the small, but significant correlation between higher levels of automatic hairpulling and negative self-beliefs ($r = .16$, $p < .01$), as reported in the current study. The association between dysfunctional cognitions and automatic hairpulling, which is defined as occurring without an identifiable antecedent and beyond one's awareness (Flessner, Woods, et al., 2008; Wetterneck & Woods, 2007), was unexpected. To the author's awareness, this is the first report of a significant relationship between automatic hairpulling and any form of cognitive-affective process. The non-significant relationship between DASS-D and MIST-A automatic scores additionally suggests that this relationship is unlikely to be explained by comorbid depression symptoms. As speculated in Study 1 (Chapter 6), this could be an indication that at least some dysfunctional beliefs (e.g., negative self-beliefs) are important maintaining mechanisms to consider even for individuals whose primary hairpulling style is automatic; potentially, via implicit processes (i.e., cognitions and beliefs that are not available to conscious inspection; cf. Buhlmann et al., 2009). Similarly, Wetterneck and Woods (2007) cautioned that not all automatically reinforced behaviours occur without a verbally-mediated process. The current finding is highly preliminary and requires further investigation.

Controlling for depression and anxiety symptoms, hierarchical regression replicated the findings of Study 2 that TTM-relevant beliefs significantly improved prediction of hairpulling severity. Combined, mood symptoms and TTM-relevant beliefs accounted for almost 26% of the variance, but TTM-relevant beliefs uniquely contributed only 4% of the variance. All factors considered, depression symptoms

(DASS-D) and negative self-beliefs (BiTS-NSB) were the only significant predictors of hairpulling severity. While the variance accounted for was small, the repeated finding that, of all three BiTS factors, negative self-beliefs is most strongly related to hairpulling severity even after controlling for depression and anxiety symptoms, is potentially clinically significant. It provides support for the proposed central role of negative self-beliefs as a cognitive trigger of hairpulling episodes, as suggested within the qualitative results of Study 1 (Chapter 6). Moreover, this finding supports past quantitative research that has found relationships between TTM, self-esteem, and shame (Diefenbach, Tolin, Hannan, et al., 2005; Noble, 2012; Norberg et al., 2007; Scott & Stevenson, 2015; Stemberger et al., 2000; Weingarden & Renshaw, 2014). That negative self-beliefs predict hairpulling severity over and above depression and anxiety possibly challenges propositions that such cognitions may only be associated with TTM due to comorbid mood disorders (e.g., Franklin & Tolin, 2007).

It is intuitively appealing that negative self-evaluations would be especially relevant to TTM, given that hair loss related to medical conditions has an adverse impact upon the self-esteem of both men and women (Alfonso, Richter-Appelt, Tosti, Viera, & García, 2005; Cash, 1999; Cash, Price, & Savin, 1993; Hilton et al., 2008; Münstedt, Manthey, Sachsse, & Vahrson, 1997). Surprisingly, the relationships between TTM, hair loss, and self-construals has not been investigated in TTM, which is all the more surprising considering that TTM onset typically occurs during the identity-formative years of adolescence; and further, that self-construals are considered relevant to the development and maintenance of OCRDs (e.g., Ahern, Kyrios, & Meyer, 2015; Bhar & Kyrios, 2007; Doron et al., 2007; García-Soriano et al., 2012; Phillips et al., 2011). Nevertheless, it appears that clinicians have recognised that the relationship between TTM and self-construals is pertinent to consider in case formulation and

treatment planning (Novak, 2014), despite the limited empirical research in this area. This is a potentially fruitful area for investigation as an aetioloigical and/or maintaining mechanism in TTM that, if addressed, could have the potential to improve psychological treatment outcomes.

This study is subject to several limitations. Due to an insufficient number of male participants, invariance testing between males and females – particularly between those who reported non-cosmetic hairpulling behaviours – was not possible. It therefore remains unknown if the BiTS measurement model is equivalent for men and women with hairpulling behaviours. Future research evaluating this will be invaluable, particularly as the BiTS items were developed based upon themes of beliefs identified in a small sample of women with TTM (Study 1, Chapter 6). Other methodological shortcomings of this study also apply to Study 2. For that reason, limitations for both studies featured in this chapter will be addressed in the following section, along with a summary of the main empirical findings.

7.4 General Discussion

Over two studies, this chapter presented the development, factor analyses, and psychometric validation of a measure of dysfunctional cognitions relevant to TTM; the BiTS. Study 2 described the EFA of an initial 50-item pool in a sample of 343 participants, of whom 57% endorsed non-cosmetic hairpulling behaviours within the previous 12 months. Three factors comprising 13 items achieved simple structure and provided the most parsimonious solution for the data. The three factors were interpreted to reflect negative self-beliefs, perfectionism/control, and emotional avoidance. Study 3 used CFA to confirm and replicate the intercorrelated, 3-factor structure of the BiTS in a new sample of 330 participants, of whom 59% reported engaging in non-cosmetic

hairpulling behaviours in the previous 12 months. The findings of this study offered further support for the factor structure of the BiTS, with CFA results indicating that the model was an excellent fit to the pooled data of HP and NP participants.

Additionally, results of the multi-group CFA supported the configural and measurement invariance of the BiTS factor structure and loadings across groups. This suggests that both HP and NP participants associated the same items with the same factors (i.e., configural invariance), and that there were no differences in the way HP and NP participants interpreted the BiTS subscale constructs (i.e., measurement invariance; Cheung & Rensvold, 2002). This is an important finding, given that the BiTS factor structure was derived from the EFA performed in a pooled sample of participants with and without self-reported non-cosmetic hairpulling behaviours (cf. Tabachnick & Fidell, 2007).

In both studies, the BiTS total scale and subscales demonstrated good internal consistency in the pooled and separated group samples. The BiTS-NSB and BiTS-PC demonstrated good construct validity, however, the construct validity of the BiTS-EA may benefit from further examination of its relationship with alexithymia. This is because two of the four BiTS-EA items refer to the verbal expression of emotion as a form of emotion-focused coping, a concept that was not anticipated to be captured within the EFA. Hence, measures of alexithymia were not included in the study methodology to establish construct validity of the BiTS-EA subscale.

Despite the pooled sample of HP and NP participants from which the BiTS factor structure was derived and confirmed, the three resulting factors – negative self-beliefs, perfectionism/control, and emotional avoidance – reflect cognitive-affective processes that have repeatedly been implicated in TTM. For instance, low self-esteem

and shame-related cognitions are considered a common consequence of the disorder (e.g., due to resulting hair loss, poor self-regulatory control, social isolation, etc.; Diefenbach, Tolin, Hannan, et al., 2005; Franklin & Tolin, 2007; Noble, 2012; Norberg et al., 2007; Scott & Stevenson, 2015; Soriano et al., 1996; Stemberger et al., 2000; Weingarden & Renshaw, 2014). Clinicians have long considered perfectionism to be a relevant maintenance factor to address in TTM treatment (Golomb & Vavrichek, 2000; Pélissier & O'Connor, 2004), and has recently attracted empirical support as being associated with TTM and BFRBs (Roberts et al., 2015; Scott & Stevenson, 2015). Finally, emotion regulation constructs, including experiential avoidance, have garnered considerable support for their importance in TTM phenomenology and treatment, as reviewed throughout this thesis (e.g., Begotka et al., 2004; Keuthen et al., 2012; Norberg et al., 2007; Roberts et al., 2013; Woods, Wetterneck, et al., 2006). The repeated findings in this chapter that HP participants scored significantly higher on all three BiTS subscales than NP participants, and that the subscales were correlated with hairpulling severity – and with *focused* hairpulling in particular – adds further support to this growing literature.

Validation of the BiTS may present important opportunities to further investigate how maladaptive cognitions come to elicit hairpulling urges and behaviour. Previously, Norberg et al. (2007) found that the relationships between TTM symptoms and shame, fear of negative evaluation by others, and negative beliefs about one's physical appearance were mediated by experiential avoidance. Use of the BiTS can potentially allow replication of Norberg and colleague's seminal research to further our understanding of the relationships between experiential avoidance, maladaptive cognitions, and the elicitation of hairpulling urges and behaviours.

As previously discussed in section 7.3.4, the finding that negative self-beliefs predicted hairpulling severity even after controlling for depression and anxiety symptoms is potentially significant. Negative self-evaluations may not be simply the result of commonly comorbid mood disorders in TTM (e.g., Franklin & Tolin, 2007) nor the result of adverse psychosocial consequences stemming from the disorder (e.g., Stemberger et al., 2003), but could be a vulnerability factor in its development. For example, at least one participant in the qualitative study presented in Chapter 6 attributed her development of TTM as a result of pre-morbid low-self esteem. This must be considered a tentative suggestion, however, as the studies presented in this chapter were cross-sectional in nature and the unique proportion of variance that negative self-beliefs contributed to TTM symptoms was very small (less than 3%). It is of interest that one of the first investigations into the role of emotion regulation in TTM found that difficulties with regulating emotions of specific relevance to TTM (e.g., boredom, frustration) accounted for less than 1% of the variance in TTM symptom severity (Shusterman et al., 2009). This study nevertheless prompted important research into the role of emotion dysregulation in TTM, and has contributed to the development of effective treatments and identification of potential behaviour change mechanisms (e.g., DBT-enhanced CBT; Keuthen et al., 2012). Whether the development and evaluation of the BiTS promotes similar advances in understanding and treating TTM awaits future research.

All findings reported in this chapter ought to be interpreted with caution due to some important methodological limitations applicable to both Studies 2 and 3. First, participants were determined to engage in non-cosmetic hairpulling behaviours on the basis of a single self-report question: “Over the past 12 months, have you experienced difficulties with pulling out your hair or urges to pull out your hair for non-cosmetic

purposes?" No information pertinent to determining the presence of *DSM-5* criteria for TTM was gathered, and the only clinical characteristics inquired about were the number and type of hairpulling sites targeted. Hence, it cannot be verified that HP participants in these studies would warrant a diagnosis of TTM; just that they endorsed perceived difficulties with non-cosmetic hairpulling behaviours. Similar methods of categorising participants on the presence or absence of non-cosmetic hairpulling behaviours have been utilised elsewhere (e.g., Duke et al., 2009; Duke, Keeley, Ricketts, et al., 2010; Shusterman et al., 2009); however, the reliability of this classification method has not been evaluated.

Nevertheless, hairpulling characteristics for the combined sample of HP participants across Studies 2 and 3 are similar to those reported elsewhere. The average number of reported hairpulling sites was 2.51 and ranged from one to eight (n = 527), as similarly reported in a clinical sample of participants with TTM meeting modified *DSM-IV* criteria (Lochner et al., 2010). The most commonly reported hairpulling sites in the present study were the scalp (37%), eyebrows (20.5%), eyelashes (17.2%), and pubic region (15.8%). As summarised in section 2.3.1, similar patterns and ranges of frequencies have been reported in community and student samples of participants with TTM symptoms (e.g., Duke, Keeley, Ricketts, et al., 2010; Ghisi et al., 2013), and the same most frequently reported hairpulling sites in our sample (scalp, eyebrows, eyelashes, pubic region) have been reported as the most frequently targeted sites in other internet-surveyed TTM samples (e.g., Woods, Flessner, et al., 2006). Additionally, mean MGHHPS scores (M = 17.52, SD = 5.62, n = 486) for the pooled sample of HP participants across Studies 2 and 3 are comparable with those typically reported in treatment-seeking clinical TTM samples (e.g., Keuthen et al., 2012; van Minnen et al., 2003; Woods, Wetterneck, et al., 2006). By contrast, of the NP participants with

MGHHPS data, their reported symptoms were minimal (*M* = 0.26, *SD* = 0.93, range = 0 – 5, *n* = 68). This provides some confidence that (a) all participants correctly interpreted the question as inquiring about non-cosmetic hairpulling unrelated to personal grooming or hygiene purposes, and (b) in the week prior to completing the BiTS, HP participants had reportedly experienced moderate to severe TTM symptoms equivalent with treatment-seeking samples, on average.

Second, self-reported diagnoses of other psychological disorders were not inquired about for either HP or NP participants. This means there is no indication of the rates of psychopathology present in the sample of NP participants or of comorbidity rates within the HP participants. Given the high rates of comorbid psychopathology in TTM (e.g., Christenson, Mackenzie, et al., 1991) and the high psychological distress reported in student samples (e.g., Stallman, 2010) from which NP participants were primarily recruited, it remains a possibility that the BiTS factors were extracted on the basis of being related to general distress as opposed to being specific to non-cosmetic hairpulling symptoms. On average, however, NP participants across both studies (*n* = 281) reported minimal, non-clinical levels of depression (*M* = 4.36, *SD* = 4.81) and anxiety (*M* = 3.68, *SD* = 4.31), as measured by the DASS-21. Again, the fact that the three BiTS subscales refer to constructs that have been repeatedly identified as being relevant to TTM increases confidence that negative self-beliefs, perfectionism/control, and emotional avoidance – while certainly transdiagnostic processes associated with symptoms of different forms of psychopathology (e.g., Beck, 1976; Chawla et al., 2007; Egan et al., 2011) – are also of clinical importance to TTM.

The BiTS is in its early stages of development and validation. As a measure of beliefs of particular relevance to TTM, it was imperative to validate the BiTS in a clinical sample of participants with TTM diagnosed according to *DSM-5* criteria and

whose profile of comorbid psychological disorders were known, as compared to a non-clinical, community sample. This was the focus of the following chapter.

8. CHAPTER 8 – Study 4: Clinical Validation of the BiTS

8.1 Introduction

As reviewed throughout this thesis, the content, function, and specificity of cognitions related to TTM has been the focus of very limited research. To summarise the extent of this research, inflexible cognitions about desirable hair qualities (e.g., colour, texture, symmetry) have been reported anecdotally (Mansueto et al., 1997) or described phenomenologically in community and student samples of individuals reporting non-clinical hairpulling behaviours (Duke et al., 2009; Duke, Keeley, Ricketts, et al., 2010). Recently, higher levels of perfectionism have been found to correlate with self-reported TTM symptom severity (Scott & Stevenson, 2015), but while Scott and Stevenson found perfectionism to be significantly higher among participants with TTM symptoms, this was not found among participants with BFRBs including hairpulling as compared to a control group (Roberts et al., 2015). Self-regulatory constructs such as a perceived lack of control over one's behaviour have been speculated to maintain TTM symptoms (Gluhoski, 1995; Roberts et al., 2013), as have cognitions drawn from models of substance addiction (e.g., beliefs about the value of hairpulling as an effective coping strategy for psychological distress, and permission-giving cognitions; Gluhoski, 1995). Small-magnitude correlations have been reported between TTM severity and shame-related cognitions, dysfunctional beliefs about appearance, and fear of negative social evaluation (Norberg et al., 2007). Finally, cognitive constructs relating to shame and self-esteem appear to have received the greatest empirical and theoretical support for their role as consequences of TTM, which are suggested to, over time, become cues that independently elicit hairpulling behaviour (e.g., Franklin & Tolin, 2007; Weingarden & Renshaw, 2014).

Based upon this tentative evidence, the core proposition of this thesis is that dysfunctional cognitions and beliefs are associated with TTM. The qualitative findings of Study 1 (Chapter 6) provided rich, in-depth support for much of the aforementioned empirical findings and justified further quantitative investigation of maladaptive cognitions in a larger, demographically diverse sample of participants experiencing varying degrees of TTM symptomatology. The BiTS was developed to enable such investigation for the purpose of this thesis. More than this, however, the development and validation of the BiTS is anticipated to facilitate future research into the relationships between TTM and dysfunctional beliefs (especially in relation to, and accounting for, common comorbidities such as mood disorders and other OCRDs), such that models of, and treatments for TTM, can be improved.

Studies 2 and 3 (Chapter 7) provided support for the internal consistency and construct validity of the 13-item BiTS, which is comprised of three subscales; negative self-beliefs, perfectionism/control, and cognitions relating to emotional avoidance. Both studies found that hairpulling severity was significantly associated with each subscale to a moderate degree, suggesting that greater endorsement of negative self-beliefs, perfectionism/control, and a preference to avoid experiencing and expressing negative emotions is associated with increased severity of hairpulling behaviours and urges, as measured by the MGHHPS. Despite these three subscales being derived from and replicated within a pooled sample of participants who either did or did not endorse non-cosmetic hairpulling behaviours, the three cognitive-affective constructs represented within the BiTS are those that have been repeatedly identified as relevant to TTM phenomenology (for a summary, refer to section 7.4). Participants who self-reported perceived difficulties with non-cosmetic hairpulling behaviours reported significantly greater endorsement of TTM-relevant beliefs than did participants who did not report

symptoms. However, only negative-self beliefs predicted hairpulling severity in the pooled sample of participants with and without non-cosmetic hairpulling behaviours, over and above anxiety and depression symptoms, and to a small degree.

While promising, methodological limitations of the previous studies restrain the generalisability of the findings to only self-reported non-cosmetic hairpulling because participants' symptoms were not verified according to *DSM-5* diagnostic criteria for TTM. Further, no information on the presence of comorbid psychological disorders was obtained. This makes it difficult to conclude that the relationships identified between dysfunctional beliefs and hairpulling severity could be attributed specifically to TTM psychopathology. Relatedly, while negative self-beliefs predicted hairpulling severity over and above depression and anxiety symptoms, the influence of other comorbid disorders cannot be ruled out as having contributed to this finding. Up to 24% and 29% of individuals with TTM also have BDD or OCD, respectively (Odlaug & Grant, 2008; Soriano et al., 1996). Low self-esteem and shame-related cognitions are known to occur in these other OCRDs (for a review, see Weingarden & Renshaw, 2014). Cognitive models of BDD and OCD suggest that self-beliefs relating to one's sense of identity and worth are influential to the development and maintenance of these disorders (Guidano & Liotti, 1983; Rachman, 1997; Veale, & Neziroglu, 2010). Comorbid OCRDs may have therefore acted as confounding factors that inflated the relationship between negative self-beliefs and hairpulling severity, as found in Studies 2 and 3. Indeed, researchers have speculated that when cognitive-affective factors are apparent in TTM, they may be better explained by comorbid disorders such as MDD, OCD or OCPD (Christenson et al., 1993; Franklin & Tolin, 2007; Mansueto et al., 1997).

The aim of the final empirical study of this thesis was twofold: (1) to validate the internal consistency and construct validity of the BiTS in a clinical sample of

participants with TTM, and (2) to investigate the relationships between TTM-relevant beliefs and TTM symptoms, controlling for depression and anxiety, in a clinical TTM sample compared with an age- and gender-matched control group. Consistent with the findings of Studies 2 and 3, the internal consistency and construct validity of the BiTS was anticipated to be replicated. It was also anticipated that greater endorsement of TTM-relevant beliefs – especially negative self-beliefs – would be significantly and positively correlated with hairpulling severity, even after controlling for depression and anxiety symptoms. Focused hairpulling, but not automatic hairpulling, was hypothesised to correlate positively with TTM-relevant beliefs. Finally, participants with TTM were hypothesised to report significantly greater TTM-relevant beliefs than control group participants, even after controlling for depression and anxiety symptoms.

8.2 Method

8.2.1 Participants. Participants with TTM were recruited through advertisements to national and international TTM-specific advocacy organisations and online peer support forums (Appendix DD). Eligibility criteria included: (1) being aged 18 years or older; (2) having self-reported distressing, non-cosmetic hairpulling; (3) being willing and available to participate in a clinical interview in-person or via teleconferencing software (Skype); and (4) being proficient in speaking English. Participants were ineligible if they experienced current high suicide risk, lifetime or current psychotic illness, or current substance/alcohol dependence. Between January and November of 2014, 41 individuals (36 females) contacted the researchers about participating, of whom 23 (48%) consented to participate. Participants included 21 females and two males with self-reported TTM. All but one participant were Australian residents; the other was a resident of the United Kingdom. Two participants were

ineligible due to current substance (cannabis) dependence. One participant declined further participation following clinical interview and was subsequently excluded.

The final sample included 20 participants (18 females) whose hairpulling behaviours met full (n = 16) or subthreshold (n = 4) *DSM-5* criteria.[6] Diagnoses were made by a provisional psychologist (research student) under the supervision of a qualified clinical psychologist (primary supervisor). TTM was diagnosed using a diagnostic interview schedule developed specifically for the current study (see section 8.2.2). Comorbid *DSM-IV* diagnoses were made using the MINI (Lecrubier et al., 1997; Sheehan et al., 1997; Sheehan et al., 1998). Participant ages ranged from 18 to 39 years (M = 28.65, SD = 6.43).

Additionally, 51 control participants were recruited through university- and community-distributed advertisements (Appendix EE), and were financially reimbursed for their participation. Sixteen of those participants (31%) were recruited through undergraduate psychology courses at Swinburne University of Technology in receipt of partial course credit, and they were therefore not financially reimbursed. Eligibility criteria included: (1) being aged 18 years or older; (2) a self-reported absence of distressing, non-cosmetic hairpulling; (3) a self-reported absence of a current, diagnosed psychological disorder; (4) being willing and available to participate in a clinical interview, in-person; and (5) being proficient in speaking English. Participants were ineligible if they experienced current high suicide risk, lifetime or current psychotic

[6]Subthreshold criteria included meeting criterion A (recurrent hairpulling resulting in hair loss) and at least two of the remaining four criteria (APA, 2013). Appendix FF presents comparisons of descriptive and clinical characteristics between participants with subthreshold versus full criteria TTM.

illness, or current substance/alcohol dependence. Three participants were ineligible due to current substance (cannabis) or alcohol dependence.

The final sample was comprised of 48 control participants (40 females) whose ages ranged from 18 to 52 years ($M = 27.04$, $SD = 8.09$). Using the MINI, participants were screened for 17 Axis I *DSM-IV* mental disorders by a provisional psychologist and/or a suitably trained research assistant under the supervision of a qualified clinical psychologist (refer to section 8.2.3 for further details).

Demographic characteristics for clinical and control participants are summarised in Table 8.1. As shown, there were a higher proportion of students and postgraduate-educated participants in the control group, reflecting the population from which these participants were recruited. The proportion of participants not in a relationship (i.e., single) was higher in the TTM sample. Both samples were ethnically diverse. Table 8.2 presents the frequencies of mental disorders diagnosed in each group. A significantly higher proportion of TTM participants were diagnosed with any Axis I *DSM-IV* mental disorder, besides TTM, compared to control participants [$\chi^2(1, n = 68) = 15.56$ (Yates Continuity Correction), $p < .001$, phi = .51].

Table 8.1

Demographic Characteristics According to Group

Variable	TTM (*n* = 20)	Control (*n* = 48)
Gender		
Female	18 (90)	40 (83.3)
Male	2 (10)	8 (16.7)
Employment status		
Full-time	11 (55)	7 (14.6)
Part-time/casual	3 (15)	6 (12.5)
Student	2 (10)	35 (72.9)
Unemployed	4 (20)	-
Education		
Secondary college	4 (20)	14 (29.2)
Vocational college	3 (15)	9 (18.8)
Undergraduate degree	10 (50)	10 (20.8)
Postgraduate degree	3 (15)	15 (31.3)
Marital status		
Single	14 (70)	23 (47.9)
In a relationship	5 (25)	12 (25)
Married	1 (5)	13 (27.1)
Nationality		
Australia	13 (65)	29 (60.4)
United Kingdom & Ireland	4 (20)	5 (10.4)
Europe	1 (5)	6 (12.5)
South America	0 (0)	2 (4.2)
South East Asia	1 (5)	3 (6.3)
India	0 (0)	3 (6.3)
South Africa	0 (0)	0 (0)

Note. Frequency (percentage).

Table 8.2

Number of MINI Diagnoses for TTM and Control Participants

Diagnosis	TTM (*n* = 20)	Control (*n* = 49)
No Diagnosis (other than TTM)	3 (15)	34 (70.8)
Mood Disorders		
Major Depressive Episode (past, current or recurrent)	16 (80)	13 (27.08)
Manic Episode (past)	3 (15)	0 (0)
Mood Disorder with Psychotic Features (lifetime)	1 (5)	0 (0)
Anxiety Disorders		
Generalised Anxiety Disorder	5 (25)	0 (0)
Panic Disorder (with or without Agoraphobia)	3 (15)	1 (2.08)
Social Phobia	2 (10)	0 (0)
Post-Traumatic Stress Disorder	1 (5)	0 (0)
Other		
Alcohol Abuse	0 (0)	1 (2.08)

Note. Frequency (percent). As 10 TTM participants and one control participant had at least one comorbid MINI diagnosis, percentages do not add to 100.

8.2.2 Measures. The same measures used in Studies 2 and 3 (Chapter 7) were again utilised in this study, in addition to two structured diagnostic interviews.

The *Diagnostic Interview for Trichotillomania* (DIT) was developed by the researchers for the purpose of the current study (Appendix GG). In the absence of validated *DSM-5* diagnostic schedules for TTM, items were designed to assess *DSM-5* criteria (APA, 2013) based upon pre-existing diagnostic interview schedules that assessed TTM according to *DSM-IV-TR* criteria (APA, 2000); namely, the MTAI-II

(Christenson, Mackenzie, et al., 1991), the PITS (Winchel, Jones, Molcho, et al., 1992), and the YBOCS:TM (Stanley et al., 1993).

The *Mini-International Neuropsychiatric Interview* – version 6 (MINI; Lecrubier et al., 1997; Sheehan et al., 1997; Sheehan et al., 1998) is a brief, structured diagnostic interview designed to screen for 17 Axis I mental disorders according to *DSM-IV* criteria. The MINI has been found to correlate with other popular diagnostic interviews of greater administration length (Lecrubrier et al., 1997; Sheehan et al., 1997), and has demonstrated excellent inter-rater reliability (Sheehan et al., 1998). Sheehan et al. (1997) reported that specificity values were at least 0.85 for all diagnoses, and sensitivity values were above 0.70 for most diagnoses, excluding dysthymia, OCD, and current substance dependence.

8.2.3 Procedure. A provisional psychologist (research student) conducted the diagnostic interviews with all TTM participants and some control participants. The majority of control participants completed their diagnostic interview with a suitably trained research assistant. Both interviewers received training and supervision from a qualified clinical psychologist (primary supervisor) with clinical and research expertise in OCRDs. The diagnostic interview comprised demographic information, the DIT and the MINI. Interview duration ranged from approximately 10 to 30 minutes for control participants and up to 90 minutes for TTM participants. Following the diagnostic interview, all participants completed a battery of online surveys via the *PsychSurveys* platform (www.psychsurveys.org) in the following order: MGHHPS, MIST-A (TTM participants only), BiTS, DASS-21, OBQ-44 (PC subscale only), UPPS (limited subscales), AAQ-II, RSE, ACQ-R, DERS, and DTS. Survey completion time was approximately 40 minutes. All participants provided consent in accordance with the

study protocol approved by Swinburne University Human Research Ethics Committee (Appendices HH – JJ).

8.3 Results

8.3.1 Sample characteristics. Table 8.3 presents the means and standard deviations on measures of hairpulling and mood symptoms for TTM and control participants. On average, TTM participants endorsed moderate TTM symptoms in the previous seven days as measured by the MGHHPS (Keuthen et al., 1995). Scores on the MIST-A focused and automatic subscales were slightly higher than scores reported in a sample of internet-surveyed participants with TTM (Flessner, Woods et al., 2008). Control participants reported almost no hairpulling symptoms on the MGHHPS.

Table 8.3

Means and (Standard Deviations) on Measures of TTM and Mood Symptoms for TTM and Control Groups

Variable	TTM (*n* = 20)		Control (*n* = 48)	
	M (*SD*)	Range	*M* (*SD*)	Range
Hairpulling symptoms				
MGHHPS	15.10 (5.94)	4 – 24	0.35 (1.28)	0 – 7
MIST-A Focused	50.65 (14.22)	22 – 72	-	-
MIST-A Automatic	26.35 (7.86)	11 – 40	-	-
Mood symptoms				
DASS-D	5.75 (4.12)	0 – 14	2.00 (3.26)	0 – 15
DASS-A	5.90 (5.79)	0 – 19	1.58 (2.87)	0 – 13

Note. MGHHPS = Massachusetts General Hospital Hair Pulling Scale; MIST-A = Milwaukee Inventory for Subtypes of Trichotillomania – Adult version; DASS-A = Depression Anxiety Stress Scales-Anxiety; DASS-D = Depression.

Participants with TTM reported mild depression and anxiety symptoms as measured by the DASS-21 (Lovibond & Lovibond, 1995), while control participants experienced minimal levels of anxiety and depression, on average.

Symptom characteristics of the TTM sample are shown in Table 8.4. On average, participants reportedly began hairpulling at age 11.91 (*SD* = 3.65), and experienced an estimated average of 34 days abstinent of hairpulling in the six months prior to the assessment. In the six months prior to the assessment, participants with TTM estimated that they spent an average of just over two hours thinking about hairpulling and its consequences each week, and spent approximately one and a quarter hours engaged in hairpulling behaviours each week.

Additionally, thirteen participants (65%) reported that a healthcare professional had formally diagnosed them with TTM; the majority of whom (30%, *n* = 6) were diagnosed by a general practitioner (although it should be noted that three participants reported that their doctor "accepted" their self-diagnosis of TTM). Seven participants (35%) had never sought treatment for TTM. Of those who had sought treatment for TTM in their lifetime, the majority (60%, *n* = 12) had received treatment from a psychologist. The majority (15%, *n* = 3) of treatment recipients had engaged in treatment for between one and six months, and 25% (*n* = 5) of all treatment recipients rated the effectiveness of their treatment as moderately successful on a scale from 0 (*made symptoms worse*) to 6 (*extremely successful*).

Table 8.4

Symptom Characteristics and Hairpulling Sites of Participants with TTM (n =20)

	***M* (*SD*)**	**Range**	**Frequency (%)**
Symptom characteristics			
Age at symptom onset	11.91 (3.65)	5 – 20	-
Longest number of days pull-free [a]	33.95 (59.75)	0 – 181	-
Minutes spent hairpulling per week on average [a]	78.55 (102.55)	0 – 350	-
Minutes spent thinking about hairpulling per week on average [a]	128.30 (161.59)	1 – 610	-
Perceived distress caused by TTM [b]	3.50 (1.40)	1 – 6	-
Perceived functional impact caused by TTM [b]	2.55 (1.40)	0 – 5	-
Number of hairpulling sites [c]	2.95	1 – 6	-
Current hairpulling sites			
Scalp	-	-	10 (50%)
Eyebrows	-	-	10 (50%)
Eyelashes	-	-	7 (35%)
Pubic region	-	-	3 (15%)
Legs	-	-	4 (20%)
Arms	-	-	1 (5%)
Face	-	-	3 (15%)

Note. Percentages for "current hairpulling sites" do not add up to 100 as multiple sites were recorded per participant.

[a]Previous 6 months. [b]Scale range: 0 = *no distress/impact* – 6 = *extremely severe distress/impact*.

[c]Lifetime.

8.3.2 Data screening. Statistical analyses were performed using SPSS version 22.0. Histogram inspection of MGHHPS scores revealed a bimodal distribution in which zero TTM symptoms were reported by most of the control participants, while TTM participants reported a symptom severity distribution ranging from mild to severe. As transformations failed to improve normality for control participants' MGHHPS scores, non-parametric tests were performed as necessary.

Several variables had high skewness and kurtosis ratios (> 2) among the control participants' data, while most variables among TTM participants were normally distributed. Five univariate outliers (DASS-21, BiTS scales) were identified in the control group and removed; however, their removal did not improve normality nor did it substantially change the results of any analyses. Therefore, the data for these five participants were retained, and log and square root transformations were applied to relevant variables to restore normality as required (i.e., skew/kurtosis ratios < 2). Non-parametric tests were also performed when transformations failed to improve normality.

One univariate outlier was identified in the TTM group due to a low BiTS-PC score of seven. Removal did restore the normality of the affected variable. However, due to low statistical power resulting from the small size of this sample, this participant's BiTS-PC score was retained in the analyses, but was altered such that it became one unit less than the next lowest recorded BiTS-PC score, resulting in a transformed score of 15 (cf. Tabachnick & Fidell, 2007). This amendment restored the normality of the BiTS-PC subscale score distribution (i.e., skew/kurtosis ratios < 2).

8.3.3 Internal validity. Reliability and internal consistency among the BiTS total scale and subscales were examined separately for the TTM and control participants. As shown in Table 8.5, the total BiTS scale ($\alpha = 0.86 – 0.87$) and subscales ($\alpha = 0.72 –$

0.89) demonstrated good to adequate reliability across both groups. The BiTS-EA demonstrated the lowest reliability in both groups, but was still acceptable (Nunnally, 1978).

Table 8.5

Means, (Standard Deviations), and Cronbach's Alpha Coefficients for BiTS Subscale and Total Scale Scores for TTM and Control Groups

	TTM (*n* = 20)			**Control (*n* = 48)**		
	M	*SD*	α	*M*	*SD*	α
BiTS-NSB	23.55	7.68	0.89	11.63	5.98	0.81
BiTS-PC	21.20	3.49	0.84	14.14	5.53	0.78
BiTS-EA	14.40	6.07	0.82	10.69	4.96	0.72
BiTS total	53.85	12.70	0.87	32.08	12.50	0.86

Note. BiTS = Beliefs in Trichotillomania Scale; NSB = Negative Self-Beliefs; PC = Perfectionism/Control; EA = Emotional Avoidance.

Pearson's correlations between each BiTS subscale were also performed separately in each group to evaluate the internal validity of the subscales (Table 8.6). Among participants with TTM, the BiTS-EA scores did not correlate with the BiTS-NSB or BiTS-PC scores, which may have resulted from a lack of statistical power given the small sample size of 20 participants. However, the BiTS-NSB and BiTS-PC scores did show a large-strength correlation in TTM participants, indicating that higher scores on both subscales corresponded with higher endorsement of both negative self-beliefs and perfectionism/control beliefs. Among control participants, all BiTS subscale scores

were significantly and strongly correlated with each other, suggesting that these constructs are related in individuals without TTM.

Table 8.6

Inter-Correlations between BiTS Subscale Scores for TTM and Control Groups

	TTM (*n* = 20)				**Control (*n* = 48)**			
	1.	**2.**	**3.**	**4.**	**1.**	**2.**	**3.**	**4.**
1. BiTS-NSB	1				1			
2. BiTS-PC	.64*	1			.56*	1		
3. BiTS-EA	.36	.08	1		.51*	.45*	1	
4. BiTS total	.90*	.61*	.70*	1	.86*	.77*	.80*	1

Note. BiTS = Beliefs in Trichotillomania Scale; NSB = Negative Self-Beliefs; PC = Perfectionism/Control; EA = Emotional Avoidance.

BiTS-NSB and BiTS-EA data for control participants are square root transformed.

*$p < .01$.

8.3.4 Construct validity. Pearson's correlations between each of the BiTS subscales and a range of psychological measures were conducted to investigate convergent and discriminant validity with other constructs. Correlations were performed separately for TTM (Table 8.7) and control (Table 8.8) participants.

Table 8.7

Pearson's Correlations between BiTS Subscales and Other Constructs for TTM Participants (n = 20)

	BiTS-NSB	**BiTS-PC**	**BiTS-EA**	*M*	*SD*
RSE	-.87**	-.71**	-.23	16.20	6.48
OBQ-PC	.56*	.73**	.26	70.60	21.04
AAQ-II	.76**	.76**	.37	46.70	11.01
DTS	-.76**	-.76**	-.30	2.52	0.94
ACQ-SC	-.55*	-.35	-.39	8.45	4.49
ACQ-TC	-.44*	-.47*	-.37	13.40	6.64
ACQ-EC	-.81**	-.66**	-.42	13.80	6.00
DERS-IM	.60**	.42*	.66**	16.35	6.06
DERS-NA	.74**	.76**	.35	17.50	7.58
DERS-G	.64**	.65**	.18	18.05	4.88
DERS-AE	.60**	.52*	.51*	16.55	5.17
DERS-S	.73**	.75**	.30	23.45	8.02
DERS-C	.67**	.69**	.59**	13.65	4.37
UPPS-URG	.70**	.54*	.68**	2.78	0.66
UPPS-PREM	.15	-.14	.36	1.93	0.36
UPPS-PERS	.62**	.28	.51*	2.38	0.41

Note. BiTS = Beliefs in Trichotillomania Scale; NSB = Negative Self-Beliefs; PC = Perfectionism/Control; EA = Emotional Avoidance; RSE = Rosenberg Self-Esteem scale; OBQ-PC = Obsessive Beliefs Questionnaire-Perfectionism/Certainty subscale; AAQ-II = Acceptance and Action Questionnaire-II; DTS = Distress Tolerance Scale; ACQ-SC = Anxiety Control Questionnaire-Stress Control; TC; Threat Control; EC = Emotional Control; DERS-IM = Difficulties in Emotion Regulation Scale-Impulsivity; NA = Non-Acceptance; G = Goals; AE = Awareness of Emotion; S = Strategies; C = Clarity; UPPS-URG = Urgency, Premeditation, Perseverance, Sensation-Seeking Impulsive Behaviour Scale-Urgency; PREM = Premeditation (lack of); PERS = Perseverance (lack of).
ACQ-EC means and standard deviations are untransformed; correlations are square root transformed.
*$p < .05$; **$p < .01$.

For TTM participants, the strongest correlation with the BiTS-NSB subscale was with RSE scores (*r* = -.87), supporting its construct validity as a measure of negative self-appraisals relating to self-esteem and self-worth. There was also a strong correlation between the BiTS-NSB and ACQ-EC (*r* = -.81), suggesting that as a sense of emotional control increased, negative self-beliefs relevant to TTM decreased. This relationship corroborates the moderate- to high-strength relationships found in this study between the BiTS-NSB subscale, and other measures of emotion regulation and distress tolerance. The BiTS-PC subscale shared its strongest correlations with experiential avoidance (AAQ-II *r* = .76), distress tolerance (DTS *r* = -.76), dysregulation of negative affect (DERS-NA *r* = .76), and limited access to coping strategies (DERS-S *r* = .75). These relationships can be explained by the BiTS-PC subscale's emphasis on reducing unpleasant emotional experiences when imperfect standards are corrected or controlled (e.g., BiTS-PC item 2; "If I am unable to fix something so that it's perfect I won't be able to stop thinking or feeling uncomfortable about it"). The BiTS-PC nonetheless had a strong correlation with the OBQ-PC (*r* = .73), supporting its construct validity as a measure of perfectionism/control. Finally, the BiTS-EA subscale had good discriminant validity from broader measures of anxiety control, distress tolerance, self-esteem, perfectionism/certainty, and experiential avoidance. The BiTS-EA subscale was strongly correlated with a tendency to act impulsively when experiencing negative affect (UPPS-URG *r* = .68, DERS-IMP *r* = .66), poor clarity of emotional experiences and awareness (DERS-C *r* = .59, DERS-AE *r* = .51), and a lack of perseverance when confronted with challenging situations (UPPS-PERS *r* = .51).

Table 8.8

Pearson's Correlations between BiTS Subscales and Other Constructs for Control Participants (n = 48)

	BiTS-NSB	**BiTS-PC**	**BiTS-EA**	*M*	*SD*
RSE	.64**	.25	.33*	23.18	4.93
OBQ-PC	.64**	.71**	.44**	48.76	18.95
AAQ-II	.73**	.49**	.34*	26.47	8.89
DTS	-.56**	-.64**	-.31*	3.65	0.82
ACQ-SC	-.50**	-.21	-.26	13.00	3.49
ACQ-TC	-.44**	-.36*	-.42**	20.80	4.41
ACQ-EC	-.40**	-.38**	-.15	16.14	4.24
DERS-IM	.62**	.47**	.20	10.02	3.33
DERS-NA	.50**	.37**	.34*	11.51	4.92
DERS-G	.51**	.32*	.10	12.57	4.37
DERS-AE	.25	.12	.32*	13.43	4.44
DERS-S	.69**	.41**	.35*	14.12	6.12
DERS-C	.47**	.30*	.42**	9.29	2.74
UPPS-URG	.38**	.15	.05	2.24	0.51
UPPS-PREM	-.18	-.33*	-.31*	2.13	0.43
UPPS-PERS	.10	-.15	.30*	2.11	0.41

Note. BiTS = Beliefs in Trichotillomania Scale; NSB = Negative Self-Beliefs; PC = Perfectionism/Control; EA = Emotional Avoidance; RSE = Rosenberg Self-Esteem scale; OBQ-PC = Obsessive Beliefs Questionnaire-Perfectionism/Certainty subscale; AAQ-II = Acceptance and Action Questionnaire-II; DTS = Distress Tolerance Scale; ACQ-SC = Anxiety Control Questionnaire-Stress Control; TC; Threat Control; EC = Emotional Control; DERS-IM = Difficulties in Emotion Regulation Scale-Impulsivity; NA = Non-Acceptance; G = Goals; AE = Awareness of Emotion; S = Strategies; C = Clarity; UPPS-URG = Urgency, Premeditation, Perseverance, Sensation-Seeking Impulsive Behaviour Scale-Urgency; PREM = Premeditation (lack of); PERS = Perseverance (lack of).
BiTS-NSB and BiTS-EA correlations are square root transformed. RSE means and standard deviations are untransformed; correlations are reversed and square root transformed. AAQ-II, DERS-NA and DERS-S means and standard deviations are untransformed; correlations are log transformed.
*$p < .05$; **$p < .01$.

For control participants, the BiTS-NSB subscale was most strongly correlated with experiential avoidance (AAQ-II *r* = .73) and limited access to coping strategies (DERS-S *r* = .69). It also featured moderate to strong correlations with most other measures, suggesting that general low self-esteem and self-worth overlaps with constructs involving the regulation, control, avoidance, and tolerance of negative emotions. The BiTS-PC subscale similarly shared moderate-strength, positive correlations with several other constructs that are suggestive of the role of perfectionism and control in emotion regulation constructs. Importantly, the BiTS-PC subscale's strongest correlation was with the OBQ-PC (*r* = .71), a measure of perfectionism. Finally, the BiTS-EA subscale demonstrated good divergent validity. It shared moderate correlations only with related constructs, such as a desire for perfection and certainty (OBQ-PC *r* = .44), poor emotional clarity (DERS-C *r* = .42), and low perceived threat control (ACQ-TC *r* = -.42).

8.3.5 Relationship with TTM and other symptoms. Due to limited statistical power in the small sample of TTM participants, clinical and control participants' data were combined to assess the relationships between BiTS subscales, and TTM severity (MGHHPS) and mood symptoms (DASS-21).[7] As explained in section 8.3.2, several variables in the control participants' data were significantly skewed and normality could not be restored via transformation or by removing outliers. Spearman's rho correlations were therefore performed as a non-parametric alternative. Control participants did not complete measures of focused or automatic hairpulling (MIST-A) as this was not deemed relevant to them, so data for this variable is from the TTM participants only.

[7]Correlations separated by group are shown in Appendix KK.

As shown in Table 8.9, TTM severity experienced in the previous week, as measured by the MGHHPS, was significantly and positively correlated with dysfunctional cognitions and beliefs, as measured by the BiTS subscales (r_s = .32 – .64, p < .01). The magnitude of correlations was large for negative self-beliefs and perfectionism/control beliefs, in particular. Focused hairpulling was strongly and positively associated with negative self-beliefs (r_s = .58, p < .01), but did not correlate with any other BiTS subscales. Automatic hairpulling was not associated with any TTM-relevant beliefs (r_s = -.05 – -.15, p > .05).

Table 8.9

Zero-order Spearman's Rho Correlations between the BiTS, MGHHPS, MIST-A, and DASS-21 Scores for the Pooled Sample (N = 68)

Measure	MGHHPS	MIST-A Automatic	MIST-A Focused	DASS-D	DASS-A
BiTS-NSB	.64**	-.12	.58**	.66**	.60**
BiTS-PC	.60**	-.05	.39	.58**	.56**
BiTS-EA	.32**	-.10	.37	.47**	.45**
BiTS total	.65**	-.15	.62**	.71**	.65**
MGHHPS	1	.26	.23	.54**	.51**
MIST-A Automatic		1	-.08	-.20	-.34
MIST-A Focused			1	.51*	.59**
DASS-D				1	.60**
DASS-A					1
M	4.69	26.35	50.65	3.10	2.85
SD	7.55	7.86	14.22	3.90	4.38
N	68	20	20	68	68

Note. BiTS = Beliefs in Trichotillomania Scale; NSB = Negative Self-Beliefs; PC = Perfectionism/Control; EA = Emotional Avoidance; RSE = Rosenberg Self-Esteem scale; MGHHPS = Massachusetts General Hospital Hair Pulling Scale; MIST-A = Milwaukee Inventory for Subtypes of Trichotillomania-Adult version; DASS-A = Depression Anxiety Stress Scales-Anxiety; DASS-D = Depression.

MIST-A $N = 20$ as this data was only collected for TTM participants.

*$p < .05$, **$p < .01$.

8.3.6 Group comparisons. As shown in Table 8.10, there were moderate to strong correlations between BiTS subscales and TTM severity with depression and anxiety symptoms; the correlation between the BiTS total score and depression was particularly strong (r_s = .71, p <.01). It was therefore necessary to determine if the BiTS scores could predict TTM symptoms over and above depression and anxiety. Hierarchical regression could not be performed due to non-normal distributions in several variables for the control participants. Sequential logistic regression was therefore performed to determine if TTM-relevant cognitions could predict TTM symptoms conceptualised as group membership (TTM or control), while controlling for depression and anxiety.

Groups were matched on age [t(66) = 0.79, p = .432] and gender [Fisher's Exact Test p = .711, two-tailed]. Both groups' mean age was in the late 20's and there were a higher proportion of females than males in each group. Participants with TTM symptoms were coded 1 and control participants were coded 0. All assumptions of logistic regression were met. Depression and anxiety were entered in the first step, followed by the three BiTS subscale scores in the second step (Table 8.10).

Although depression (p = .035) and anxiety (p = .035) were both significant predictors of TTM symptoms at step 1, once BiTS subscale scores were considered in step 2, depression and anxiety were no longer significant predictors. Instead, negative self-beliefs (BiTS-NSB) were the sole unique significant predictor of TTM group membership at step 2 (p = .017). All other factors being equal, a one-unit increase in BiTS-NSB scores indicated that participants were 1.20 times more likely to be classified as having clinically significant TTM symptoms.

Table 8.10

Sequential Logistic Regression Predicting TTM or Control Group Status, Controlling for Depression and Anxiety

Step	**Predictors**						**95% C.I for Odds Ratio**	
		B	***S.E***	**Wald**	***P***	**Odds Ratio**	**Lower**	**Upper**
1								
	Constant	-2.06	0.47	19.40	.000	0.13	-	-
	DASS-D	0.90	0.04	4.43	.035	1.09	1.01	1.19
	DASS-A	0.08	0.04	3.36	.035	1.08	1.01	1.17
2								
	Constant	-7.11	2.14	11.02	.001	0.00	-	-
	DASS-D	-0.03	0.06	0.27	.601	0.97	0.87	1.09
	DASS-A	0.01	0.05	0.04	.848	1.00	0.92	1.11
	BiTS-NSB	0.18	0.08	5.74	.017	1.20	0.97	1.39
	BiTS-PC	0.18	0.11	2.93	.087	1.20	0.97	1.48
	BiTS-EA	0.00	0.08	0.00	.972	1.00	0.86	1.16

Note. C.I= confidence interval. Step 2 $p = .042$ (Hosmer & Lemeshow), .407 (Cox & Snell), .580 (Nagelkerke). Model χ^2 (5, $N = 68$) = 35.55, $p < .001$.

Including dysfunctional TTM-relevant beliefs in the model increased the accuracy of group classification from 70.6% as achieved by the base model of depression and anxiety at step 1, to 83.8% at step 2. Overall, this model (step 2) accounted for between 40.7% (Cox & Snell R^2) and 58% (Nagelkerke R^2) of the variance in TTM symptoms. However, the goodness-of-fit for the data was poor as indicated by the significant Hosmer and Lemeshow test ($p = .042$). In summary, while anxiety, depression, and dysfunctional TTM-relevant beliefs were able to distinguish

between participants with and without TTM [model χ^2 (5, N = 68) = 35.55, p < .001], it was an inadequately-fitting model to rely upon for this purpose.

Analysis of how the BiTS subscale scores distinguished between TTM and control participants provides further information on why the logistic regression model at step 2 was of poor fit. As shown in Table 8.11, TTM participants did experience significantly greater depression and anxiety symptoms than control participants, and they also scored significantly higher on each of the BiTS subscales than control participants.

Table 8.11

Comparisons between TTM and Control Participants' Scores on DASS-D, DASS-A, and BiTS Subscales

Measure	Test Statistic
DASS-D	$t(66) = 4.33, p < .001, \eta^2 = .22$
DASS-A	$U = 235.50, z = -3.47, p = .001, r = .42$
BiTS-NSB	$t(66) = 6.72, p < .001, \eta^2 = .41$
BiTS-PC	$t(55.44) = 6.38, p < .001, \eta^2 = .38$
BiTS-EA	$t(66) = 2.57, p = .012, \eta^2 = .09$
BiTS total	$t(66) = 6.51, p < .001, \eta^2 = .39$

Note. BiTS = Beliefs in Trichotillomania Scale; NSB = Negative Self-Beliefs; PC = Perfectionism/Control; EA = Emotional Avoidance; MGHHPS = Massachusetts General Hospital Hair Pulling Scale; DASS-A = Depression Anxiety Stress Scales-Anxiety; DASS-D = Depression.
Square root transformation was applied to DASS-D, BiTS-NSB and BiTS-EA data.
BiTS-PC *t*-test statistic reported is for equal variances not assumed.

However, when controlling for depression, a series of ANCOVAs (Table 8.12) found that there were significant differences between TTM and control participants in terms of their levels of negative self-beliefs (BiTS-NSB) and perfectionism/control beliefs (BiTS-PC), but not for levels of emotional avoidance (BiTS-EA). Specifically, 24% and 16% of the variance in negative self-beliefs and perfectionism/control beliefs, respectively, was explained by clinically significant TTM symptoms and not attributed to depression symptoms. Anxiety symptoms could not be included as a covariate in these analyses as the assumption of homogeneity of regression slopes between the DASS-A and several of the BiTS subscale interaction terms was violated.

Table 8.12

Summary of ANCOVA F-statistics for BiTS Subscale Comparisons between TTM and Control groups, Controlling for Depression (DASS-D)

Scale	F statistic
BiTS-NSB	$F(1, 65) = 20.48$, $p < .001$, partial $\eta^2 = .24$
BiTS-PC	$F(1, 65) = 10.78$, $p = .001$, partial $\eta^2 = .16$
BiTS-EA	$F(1, 65) = 0.59$, $p = .444$, partial $\eta^2 = .01$
BiTS total	$F(1, 65) = 18.25$, $p < .001$, partial $\eta^2 = .22$

Note. BiTS = Beliefs in Trichotillomania Scale; NSB = Negative Self-Beliefs; PC = Perfectionism/Control; EA = Emotional Avoidance.

Square root transformation was applied to DASS-D, BiTS-NSB and BiTS-EA data.

8.4 Discussion

This study examined the psychometric properties of the BiTS and explored the relationships between TTM-relevant beliefs and symptoms in a sample of age- and gender-matched participants with clinically significant TTM symptoms compared to a control group. Clinical participants included 16 individuals with a *DSM-5* diagnosis of TTM and four individuals whose hairpulling symptoms met subthreshold diagnostic criteria. A convenience sample of community and student sourced participants comprised the control group.

Replicating the findings of Studies 2 and 3 (Chapter 7), the BiTS total scale and subscales demonstrated acceptable to excellent internal consistency. Internal consistency was strongest for TTM participants, demonstrating that the reliability of the BiTS is particularly sound for individuals who have clinically significant TTM symptoms (i.e., the intended population in which the BiTS is to be used). Inter-correlations between BiTS subscales for TTM and control participants appeared to demonstrate differential patterns of relationships, which were somewhat dissimilar to patterns reported in Studies 2 and 3. Among participants with TTM, BiTS-EA scores did not correlate with BiTS-NSB or BiTS-PC scores. This contrasted with the patterns of inter-correlations among the control group, who reported strong, positive correlations among all subscales. One explanation for these findings is that the small number of TTM participants resulted in inadequate power to detect statistical significance.

Alternatively, these different patterns of subscale relationships between groups could be interpreted to corroborate the non-invariant structural covariances identified by multi-group CFA in Study 3. Assuming the constrained measurements model to be correct, there were very strong relationships among BiTS subscales for participants who did not endorse non-cosmetic hairpulling behaviours, whereas these relationships, while

significant, were attenuated among participants who did endorse non-cosmetic hairpulling. This suggests that the relationships between BiTS subscales differ between people with and without TTM symptoms (cf. Cheung & Rensvold, 2002). Specifically, it appears that the BiTS subscales have greater discriminant validity among participants with TTM symptoms, supporting its use within this particular population.

A further reflection of group differences is apparent in the somewhat dissimilar correlation patterns between the BiTS subscales and measures of construct validity for participants with and without TTM symptoms. Replicating findings from Studies 2 and 3, the BiTS-NSB and BiTS-PC had good construct validity among participants with TTM symptoms. By contrast, the BiTS-NSB in the control group featured moderate to strong correlations with most measures; its highest being with experiential avoidance (AAQ-II) and limited access to coping strategies (DERS-S), rather than with self-esteem. This could suggest that for people without TTM, the BiTS-NSB may be less a measure of negative self-appraisals, but more of general psychological distress. Further examination of the BiTS-NSB construct validity in non-clinical samples is warranted. Examination of the discriminant validity of the BiTS-NSB in both clinical and non-clinical samples is also required. Furthermore, use of a clinical TTM sample appeared to clarify the construct validity of the BiTS-EA; in the present study, this subscale demonstrated good discriminant validity because scores were only significantly correlated with poor clarity and awareness of emotion (DERS-C, DERS-AW), the tendency to act impulsively in response to negative affect (UPPS-URG), and low perseverance in the face of challenging situations (UPPS-PERS). These relationships support interpreting the BiTS-EA construct as a preference to avoid identifying, expressing, and experiencing emotion.

Regarding the relationships between TTM-relevant beliefs and symptoms, the findings of Studies 2 and 3 were mostly replicated. The hypothesis that greater endorsement of TTM-relevant beliefs (BiTS) would be positively correlated with hairpulling severity (MGHHPS) was supported, with moderate- to large-strength correlations indicating that hairpulling severity worsened as endorsement of TTM-relevant beliefs increased. Correlations were particularly strong for negative self-beliefs ($r_s = .62, p < .01$) and perfectionism/control ($r_s = .60, p < .01$). Indeed, clinicians have suggested negative self-evaluations and perfectionism may be pertinent maintaining factors of TTM (Franklin & Tolin, 2007; Golomb & Vavrichek, 2000; Novak, 2014; Pélissier & O'Connor, 2004). Only recently has quantitative, empirical evidence for these associations begun to accumulate (Larson, 2007; Noble, 2012; Norberg et al., 2007; Roberts et al., 2015; Scott & Stevenson, 2015; Weingarden & Renshaw, 2014).

Supporting the findings of Study 2 (but contrasting with those of Study 3; Chapter 7), there were no relationships between TTM-relevant beliefs and automatic hairpulling. This lack of a relationship within a clinical TTM sample supports the general consensus that automatic hairpulling occurs without conscious awareness, and therefore, is unlikely to involve specific antecedent cognitions (Flessner, Conelea, et al., 2008; Flessner, Woods, et al., 2008; Wetterneck & Woods, 2007). While Studies 2 and 3 reported small-magnitude correlations between focused hairpulling and the BiTS subscales, only negative self-beliefs were significantly associated with focused hairpulling in the present study, and with a large effect size ($r_s = .58, p < .01$). This finding is consistent with the preliminary suggestion based upon interpretative phenomenological analysis of participant interviews (Study 1, Chapter 6) that negative self-beliefs can be a critical catalyst of hairpulling, which is intentionally performed to reduce or avoid experiencing critical self-talk and associated negative emotions (i.e.

focused hairpulling). This process was articulated specifically by one participant during her qualitative interview (Participant 7, Study 1, Chapter 6): “You’re also thinking about how bad you are. I guess it, um, I guess that’s a feeling you want away, so you want to pull and take that feeling away.” These findings further substantiate suggestions that focused hairpulling can be initiated in response to “an intense thought”, in addition to other unpleasant internal states such as emotions and sensations (Flessner, Woods, et al., 2008, p. 21).

The particular importance of negative self-beliefs to TTM symptoms was demonstrated by the results of the logistic regression. Accounting for depression and anxiety symptoms, of the three BiTS subscales, only negative self-beliefs were a significant predictor of TTM group classification. This was despite both anxiety and depression symptoms significantly predicting whether a participant had clinically significant TTM symptoms or was a member of the control group at an accurate classification rate of 70.6%, prior to the inclusion of TTM-relevant beliefs. Including TTM-relevant beliefs significantly improved classification accuracy to 84%. However, the combined model of depression, anxiety, and TTM-relevant beliefs was not of a statistically good fit to determine TTM group classification. Clearly, depression, anxiety, and dysfunctional beliefs explain only some of the variance in TTM symptoms, which is consistent with models that suggest a vast array of biopsychosocial and environmental factors are likely to contribute to TTM onset and maintenance (Franklin & Tolin, 2007; Mansueto et al., 1997). This caveat should be kept in mind when considering the theoretical and treatment implications of the current study’s findings.

A further consideration for the poor fit of the logistic regression model is that only negative self-beliefs and perfectionism/control could significantly distinguish between participants with and without TTM, after controlling for depression. This

suggests that the emotional avoidance construct captured by the BiTS-EA is not specific to TTM symptoms. The somewhat conflicting findings regarding the construct validity of the BiTS-EA subscale additionally suggests that there may be a lack of conceptual clarity within the BiTS-EA item set, which is impacting upon its sensitivity. Further exploration of the construct validity of the BiTS-EA and its relationships to TTM symptoms within clinical and non-clinical samples is warranted. This will help determine the utility of retaining the BiTS-EA subscale within the measure, as there may be little value to retaining a subscale that does not contribute adequate variance to TTM symptoms or facilitate differentiation between individuals with or without the disorder.

Returning to the relationship between negative self-beliefs and TTM; the importance of this construct has been demonstrated via qualitative and quantitative methodologies, and across diverse samples of participants with varying degrees of TTM symptomatology throughout the four empirical studies comprising this thesis. Further, the relationship between TTM symptoms and negative self-beliefs has been replicated across Studies 2 – 4, even after controlling for depression symptoms. Prominent levels of shame and low self-esteem among individuals with TTM have been reported in both qualitative (Casati et al., 2000; Hersperger, 2012) and quantitative studies (Diefenbach, Tolin, Hanan, et al., 2005; duToit et al., 2001; Larson, 2007; Noble, 2012; Scott & Stevenson, 2015; Stemberger et al., 2000). Only Soriano et al. (1996) reported that, on average, self-esteem as measured by the RSE was within normative ranges for 62 participants with clinically significant TTM symptoms. As Weingarden and Renshaw (2014) highlighted, research on shame (and relatedly, self-esteem) is preliminary in TTM. Exemplifying this, four of the aforementioned eight studies that have investigated self-evaluations in TTM are either unpublished dissertations or conference presentations

(i.e., grey literature; Hersperger, 2012; Larson, 2007; Noble, 2012; Scott & Stevenson, 2015).

Only three studies have compared levels of self-esteem or shame among participants with TTM to non-clinical control groups (Diefenbach, Tolin, Hannan, et al., 2005; Noble, 2012; Scott & Stevenson, 2015). Scott and Stevenson (2015) found self-esteem to be significantly lower for 116 participants who scored ≥10 on the MGHHPS compared with 107 control participants, and that low self-esteem was significantly correlated with greater hairpulling severity. However, depression was not controlled for in this preliminary study. Diefenbach et al. (2005) found that self-esteem was significantly lower for 28 participants with TTM meeting modified *DSM-IV* criteria compared to 28 age- and gender-matched healthy control participants. However, controlling for depression symptoms, self-esteem just missed significance as a predictor of TTM group membership ($p = .05$). Results of a hierarchical regression in the TTM sample nevertheless demonstrated that low self-esteem did significantly predict hairpulling severity over and above depression (Diefenbach et al., 2005). Noble (2012) found that 114 participants who endorsed hairpulling resulting in noticeable hair loss (*DSM-IV* criterion A) reported significantly greater levels of character-, body- and behaviour-related shame than did 287 undergraduate students. However, only behaviour-related shame correlated significantly with hairpulling severity in the TTM sample, and symptoms of depression were not controlled for (Noble, 2012). Indeed, the majority of quantitative research in this area has failed to account for depression symptoms, making it difficult to establish the specificity of self-esteem and shame in TTM.

It is therefore of note that the current study found negative self-beliefs to be significantly higher among TTM participants and correlated with hairpulling severity,

even after controlling for depression. Such findings could have important implications for models of TTM. Mansueto et al. (1997) acknowledged that a limitation of their comprehensive behavioural model was that it did not consider the role of shame in eliciting or maintaining hairpulling behaviours. After synthesising the limited shame-related research in TTM and SPD, Weingarden and Renshaw (2014) suggested a cyclical relationship between shame and BFRBs, whereby shame may both elicit episodes of BFRBs and generate both symptom-based and body-shame, which trigger further episodes. Franklin and Tolin (2007) acknowledged the role of negative self-evaluations in TTM as similarly eliciting and maintaining hairpulling episodes. As such, the current findings suggest that, with further testing, cognitive behavioural models of TTM may justifiably place greater emphasis on the role of negative self-beliefs in symptom onset and maintenance. As clinicians have suggested, greater consideration of how self-construals contribute to TTM symptoms can guide the therapeutic approach taken to potentially enhance treatment outcomes (Novak, 2014). Future research is required to continue evaluating the specificity of such beliefs to TTM in the context of comorbid mood disorders, however.

This study has some methodological shortcomings. First, four of the 20 clinical participants' hairpulling symptoms did not meet full *DSM-5* criteria for TTM. These participants did endorse non-cosmetic hairpulling resulting in hair loss (criterion A; APA, 2013), reported mild hairpulling severity on average, and three participants reported a treatment-seeking history (for further charcteristics, refer to Appendix FF). Regardless, the inclusion of participants with subthreshold TTM, in addition to the overall small sample size of participants with TTM symptoms, may have resulted in insufficient statistical power and an increased the risk of Type II errors (false negatives).

It will be necessary to replicate findings in a much larger clinical sample of participants with *DSM-5* diagnosed TTM.

Second, control participants were recruited from student and community populations using convenience sampling procedures, and are not representative of these populations as a result. Students comprised 33% of the control group, and in accordance with high rates of psychological distress reported in undergraduate samples (Stallman, 2010), 47% (n = 7) of student participants were assessed to have at least one psychological disorder compared to 21% (n = 7) of community participants. As such, this was neither a "healthy" nor "non-clinical" control group. However, this may inadvertently strengthen support for the proposition that higher levels of negative self-beliefs and perfectionism/control may be of particular importance to TTM, and less the result of comorbid psychological disorders (e.g., MDD, OCD) that feature similar maladaptive cognitions (e.g., Beck, 1976; Egan et al., 2011).

Third, TTM participants were well-educated and only one participant was married, which was similarly reported among the participants of Study 1 (Chapter 6). Such demographic characteristics are not reflective of international TTM samples (e.g., Christenson et al., 1991; Woods, Flessner, et al., 2006), but raise interesting questions about possible cultural differences. Future research ought to continue validation efforts of the BiTS using nationally- and internationally-recruited participants with varying degrees of hairpulling severity, and to determine if the importance of negative self-beliefs, as measured by the BiTS-NSB, is replicated in larger samples with *DSM-5* diagnosed TTM and using longitudinal research methods.

This study provided support for the psychometric properties of the BiTS in a sample of participants with clinically significant TTM symptoms; although, it should be

noted that ongoing validation is required, as is necessary for any new measurement scale (Pett et al., 2003). Contributing to the emerging literature on the role of dysfunctional cognitions in TTM, this study demonstrated that negative-self beliefs and perfectionism/control may be especially relevant to the disorder, but only negative self-beliefs predicted hairpulling severity over and above depression symptoms. Longitudinal research is required to delineate the role of self-construals in TTM aetiology and development, as it remains unknown whether self-construals act as a vulnerability factor in precipitating TTM development, whether negative self-beliefs result from the adverse psychosocial consequences of having TTM, or are a reflection of both scenarios. In the context of CBT trials, use of the BiTS could be invaluable for tracking symptom amelioration in concert with cognitive change strategies.

PART III – GENERAL DISCUSSION AND CONCLUSION

9. CHAPTER 9 – Discussion of Findings and Conclusions

9.1 Introduction

TTM is a complex disorder associated with high levels of psychological distress and disability within interpersonal, social, and vocational domains (Duke et al., 2010; Tung, Flessner, Grant, & Keuthen, 2015). Despite this, TTM remains a poorly understood disorder that has been the subject of relatively limited research even though its estimated lifetime prevalence rates of between 1 – 4% (Christenson, Mackenzie, et al., 1991; Ghisi et al., 2013; Odlaug & Grant, 2010; King, Zohar, et al., 1995) are comparable with, if not higher, than prevalence rates of disorders such as schizophrenia and bipolar disorder (Woods & Miltenberger, 2006). As reviewed in Chapter 3, models of TTM reflect the preliminary stages at which our understanding of its development and maintenance prevails. Spurred on by phenomenological conceptualisations that compared and contrasted TTM with disorders characterised by compulsivity and impulsivity (e.g., Hollander, 1993; Hollander et al., 2006), psychobiological and behavioural models of TTM have arguably attracted the greatest interest in the last two decades (e.g., Flessner et al., 2012; Mansueto et al., 1997, 1999; Stemberger et al., 2003).

The literature reviewed throughout this thesis has evidenced a substantial lack of investigation and understanding of the role of dysfunctional cognitions and beliefs in TTM despite these factors having an important contribution to the onset and/or maintenance of many, if not all, disorders on the compulsivity-impulsivity spectrum (e.g., OCD, BDD, tic disorders, eating disorders, substance and behavioural addiction disorders; Beck et al., 1993; Buhlmann et al., 2008; Cooper, Wells, & Todd, 2004; OCCWG, 1997, 2001, 2005; O'Connor et al., 2014; Sharpe, 2002). Given that TTM is

now considered a heterogeneous disorder characterised by features of both compulsivity and impulsivity (Flessner et al., 2012); has been classified as an OCRD (APA, 2013); and that the development and testing of second and third-wave CBTs for TTM has proliferated in the last decade (e.g., Keuthen et al., 2012; Toledo et al., 2014; Woods, Wetterneck, et al., 2006), it is surprising that systematic investigation of maladaptive cognitions associated with TTM has not yet occurred. As a result, an integrated, comprehensive, and empirically-supported cognitive behavioural model of TTM has not yet been developed to guide development and evaluation efforts of its psychological treatments.

The overarching proposition of this thesis was that dysfunctional cognitions and beliefs would be associated with TTM. This thesis utilised a mixed-methods research design to evaluate this broad hypothesis, and to fulfil two aims: (1) to investigate the nature and role of dysfunctional cognitions and beliefs in TTM, and (2) to develop a psychometric measure of TTM-relevant beliefs – the Beliefs in TTM Scale (BiTS) – to support the fulfilment of the first aim. This chapter will summarise and critically discuss the results of the four empirical studies comprising this thesis. Findings pertaining to the psychometric validity of the BiTS will first be discussed, followed by findings for the relationships between TTM-relevant beliefs and TTM symptoms. Discussion of the relationships between TTM-relevant beliefs and symptoms will be couched within the existing body of literature and theorising regarding cognitions related to TTM. Given the paucity of literature in this area, cognitive models of other OCRDs will be referred to where relevant. The methodological limitations of this thesis will be acknowledged before discussing theoretical and treatment implications of the findings. Finally, conclusions stemming from this thesis and future research directions to advance knowledge and treatment of TTM will be suggested.

9.2 Summary and discussion of findings

9.2.1 Validity of the Beliefs in TTM Scale. Overall, the BiTS was found to have good internal consistency and construct validity, which was replicated across three studies using different methodologies, statistical analyses, and heterogeneous samples with varying degrees of hairpulling severity ranging from non-clinical to clinical.

The BiTS was developed from an initial pool of 50 items that referenced the six themes of beliefs identified via interpretative phinemenological analysis of interviews with eight women with TTM (Study 1, Chapter 6). Given the paucity of research on this element of TTM phenomenology, and the corresponding lack of relevant literature to review and develop empirical indicators from, this qualitative data-driven approach was deemed both appropriate and necessary (cf. Pett et al., 2003).

The underlying factor structure of the 50-item BiTS was examined using EFA with a large sample of adults who either did or did not report engaging in problematic, non-cosmetic hairpulling behaviours (Study 2, Chapter 7). A 13-item measure reflecting three distinct yet related factors was determined to be the most parsimonious solution to the BiTS. The three factors comprised: (1) negative self-beliefs, which reflected negative appraisals of self-worth, esteem, and shame; (2) perfectionism/control, which reflected a desire to attain a sense of control via achievement of perfectionistic standards; and (3) emotional avoidance, which referred to a preference to avoid acknowledging, identifying, and expressing unpleasant emotions.

This factor structure was replicated and supported according to CFA with a new sample of participants who did and did not report engaging in non-cosmetic hairpulling behaviours (Study 3, Chapter 7). Results of multi-group CFA additionally supported the configural and measurement invariance of the inter-correlated, 3-factor BiTS model

when applied to participant groups, separately. In other words, participants with and without non-cosmetic hairpulling behaviours associated the same items with the same factors, and interpreted the constructs represented by the three BiTS subscales in the same way (cf. Cheung & Rensvold, 2002). Given that the factor structure of the BiTS was derived from the pooled sample of participants whether they endorsed non-cosmetic hairpulling or not, this is an important indicator of the validity of the BiTS as a measure of TTM-relevant beliefs. There is nevertheless a possibility that factor analysis of the original 50-item BiTS could result in a different structure were it to be examined in a sample of only individuals who endorsed non-cosmetic hairpulling behaviours, or indeed, in those whose symptoms met strict *DSM-5* criteria for TTM (cf. Tabachnick & Fidell, 2007). For this reason, the BiTS may be more accurately described as a measure of beliefs relevant to self-reported non-cosmetic hairpulling; this limitation is something to be mindful of when discussing the findings and implications stemming from this thesis, and will receive further consideration in section 9.3.

Due to this limitation, the psychometric properties of the 13-item BiTS were evaluated in a sample of 20 participants with clinically significant TTM symptoms, 80% (n = 16) of whom received a *DSM-5* diagnosis of TTM (Study 4, Chapter 8). Findings of this study largely replicated support for the internal consistency and construct validity of the BiTS as reported in Studies 2 and 3. Across all three studies evaluating the BiTS, internal consistency of the subscales among participants with hairpulling/TTM symptoms was stable, with the lowest and highest reliability coefficients consistently reported for the BiTS-EA and BiTS-NSB subscales, respectively (range of $\alpha = 0.72 – 0.89$). The stability of the subscales' internal consistency was similarly found for participants who did not report non-cosmetic hairpulling behaviour across all three BiTS validation studies (range of $\alpha = 0.76 – 0.89$).

Mean subscale and total scale scores reported by participants endorsing hairpulling/TTM symptoms across groups and across the three studies were also relatively consistent. Compared to mean subscale scores reported in Studies 2 and 3, mean scores in Study 4 were slightly higher among TTM participants in the clinical validation study, reflecting the severity of their symptoms; and slightly lower among the control group, reflecting the greater selectivity of recruitment strategy employed in this study.

Despite the hypothesised positive and significant inter-correlations between the BiTS subscale scores among TTM participants in the clinical validation study (Study 4), this was not found. BiTS-NSB and BiTS-PC subscale scores were moderately correlated in TTM participants ($r = .64$, $p < .05$), but no other significant inter-correlations were present. By contrast, all subscales were significantly correlated among the control group (range of $r = .45 – .56$, $p < .01$). As explained in Chapter 8, this difference could be the result of a Type II error (false negative) due to the small size of the TTM sample, and/or may be an indication of the non-invariant structural covariances identified by multi-group CFA in Study 3. The consequences of non-invariant structural covariances has no impact on the configural or measurement invariance of the BiTS measurement model, but may suggest that people with and without hairpulling/TTM symptoms perceive different relationships between the BiTS subscales. Specifically, it appears that the BiTS subscales have better discriminant validity when used to assess individuals with TTM symptoms, which is the intended population within which the measure is to be used.

Across all three studies, the construct validity of the BiTS-NSB and BiTS-PC subscales was supported, with each subscale featuring its strongest correlations with measures of self-esteem (RSE) and perfectionism/certainty (OBQ-PC), respectively.

Across the EFA and CFA studies (Chapter 7), construct validity for the BiTS-EA subscale was weak according to the tripartite model of validity (Guion, 1980). Besides no association with a lack of premeditation before acting, evidence of discriminant validity was lacking due to the BiTS-EA subscale having moderate to strong correlations with all measures of self-esteem, perfectionism/certainty, perceptions of anxiety control, distress tolerance, experiential avoidance, emotion dysregulation, and impulsivity (range of r = -.25 – -.54, p < .01). Perhaps contributing to this was the verbal component to emotion-focused coping reflected in two of the four BiTS-EA items (e.g., "I am not good at talking about my emotions"), but which was not anticipated to be specifically represented within the BiTS factor structure. Results of the clinical validity study did, however, provide clarification of the construct validity of the BiTS-EA. For TTM participants in Study 4 (Chapter 8), BiTS-EA scores exhibited strong discriminant validity, having correlated only with measures of poor clarity and awareness of emotion, the tendency to act impulsively in response to negative affect, and low perseverance in the face of challenging circumstances. These relationships support interpreting the BiTS-EA construct as one of a preference to avoid expressing and experiencing unpleasant emotions.

Despite this construct clarification, the BiTS-EA subscale nevertheless accounted for the least variance in hairpulling/TTM symptoms across all three validation studies according to correlational and regression analyses. Although BiTS-EA scores could differentiate between participants who did and did not endorse non-cosmetic hairpulling symptoms in Study 3, this was no longer the case in Study 4 when controlling for the influence of depression symptoms in a clinical TTM sample. By contrast, scores on the BiTS-NSB and BiTS-PC subscales successfully differentiated

between participants with and without hairpulling/TTM symptoms across all three studies, even after controlling for depression in this clinical validation study.

Given that alexithymia – particularly the facet of emotion identification – has been found to significantly predict hairpulling severity when controlling for depression (Rufer et al., 2014), the limited specificity of BiTS-EA scores to hairpulling symptoms in the present research could be interpreted in at least two ways; (1) a preference to avoid the experience and expression of unpleasant emotions is related, but not specific, to TTM symptoms, and/or (2) there could be poor conceptual clarity within the BiTS-EA item set, which has influenced its poor sensitivity. To date, Rufer et al. (2014) have been the only researchers to report on the role of alexithymia in TTM. In the context of what is now known about the importance of emotion regulation in TTM and its effective treatment (e.g., Roberts et al., 2013), further examination of the BiTS-EA construct in association with measures of alexithymia could extend Rufer and colleague's preliminary findings. Additionally, such research may provide further clarity on the role of affective expression and language-based processes in eliciting hairpulling urges and behaviours. As discussed in section 4.3.1, inflexible relational framing abilities have been proposed to account for poor behavioural control in TTM (Wetterneck & Woods, 2007). This may be an important area of research to enhance understanding the cognitive/verbal processes eliciting behaviour change following ACT for TTM (e.g., Woods, Wetterneck, et al., 2006). Nevertheless, should the BiTS-EA subscale continue to demonstrate inadequate construct validity and weak relationships with TTM symptoms in future studies, its utility for inclusion within the BiTS may not be justified; particularly when there already exist brief, validated measures of experiential avoidance and emotion dysregulation specific to TTM (e.g., the AAQ-TTM by Houghton et al., 2014 and the ARR by Keuthen et al., 2012, respectively).

To conclude, the BiTS was developed on the basis of a systematic approach in which qualitative investigation of the content of dysfunctional cognitions and beliefs in TTM was first conducted to support the generation of a 50-item pool of empirical indicators (cf. Pett et al., 2003). The factor structure and internal consistency of the 13-item BiTS has been repeatedly supported across three studies using different statistical methods, and among samples with varying degrees of non-cosmetic hairpulling behaviours, including participants with *DSM-5* diagnosed TTM. Construct validity and specificity to hairpulling/TTM symptoms has been repeatedly found for the BiTS-NSB and BiTS-PC subscales in particular, but support for the validity of the BiTS-EA subscale would benefit from ongoing evaluation. Regardless, there is strong potential for the BiTS to advance our knowledge of the role of cognitions and beliefs in TTM, and to evaluate the effectiveness of CBT for TTM, as will be discussed in the following sections.

9.2.2 The role of dysfunctional cognitions and beliefs in TTM. Two decades ago, Gluhoski (1995) proposed a cognitive model of TTM that was based upon Beck and colleague's (1993) cognitive model of substance abuse. Limited investigation of the role of dysfunctional cognitions in TTM has since followed the proposal of this model (e.g., Norberg et al., 2007; Roberts et al., 2015). Behaviourally-based models of TTM acknowledge that dysfunctional cognitions (e.g., desire for symmetry, perfectionism, negative self-evaluations) are a factor to be considered in formulation and treatment planning, however, the role of such cognitions has typically been suggested as something that is mostly relevant to individuals who have comorbid obsessive-compulsive or depressive symptomatology (Franklin & Tolin, 2007; Mansueto et al., 1997). Indeed, the notion that TTM might be more appropriately conceptualised as a "motorically focused" disorder that is less characterised by cognitive processes was one

of the arguments put forth as to why its *DSM-5* classification as an OCRD (alongside "cognitively focused" disorders such as OCD and BDD) was controversial (Phillips et al., 2010, p. 543).

However, the findings presented in this thesis challenge such views. In-depth interviews with eight women with *DSM-IV* diagnosed TTM identified six themes of beliefs considered relevant to the onset and maintenance of hairpulling episodes: negative-self beliefs, control beliefs, coping beliefs, beliefs about negative emotion, permission-giving cognitions, and perfectionistic standards (particularly for hair qualities). Factor analyses supported retaining three related constructs: negative self-beliefs, perfectionism/control, and emotional avoidance. As discussed above, only negative self-beliefs and perfectionism/control were consistently found to contribute statistically significant, albeit small, proportion of variance in hairpulling severity in samples with self-reported and clinically-assessed TTM symptoms, even after controlling for mood symptoms. These two beliefs domains will therefore constitute the focus of the following discussions.

9.2.2.1 Negative self-beliefs. The significant relationship between TTM symptoms and negative self-beliefs was repeatedly demonstrated by the empirical studies comprising this thesis. Qualitatively, a sense of worthlessness, shame, and appraising oneself as being fundamentally "abnormal" was reported by participants to be a key precipitating and maintaining factor of hairpulling episodes. Quantitatively, similar negative self-beliefs as measured by the BiTS were found to be significantly correlated with hairpulling severity to a moderate degree for participants who endorsed non-cosmetic hairpulling behaviours, and to a large degree for participants with clinically significant TTM symptoms, including those whose symptoms met full *DSM-5* diagnostic criteria. Additionally, negative self-beliefs were found to predict hairpulling

severity even after controlling for depression and anxiety symptoms, and significantly differentiated between participants with and without hairpulling/TTM symptoms – also while controlling for the influence of depression. This suggests that there is some specificity to negative evaluations of self-worth above and beyond comorbid depressive psychopathology, which contrasts with suggestions offered by behaviourally-focused models of the disorder (Franklin & Tolin, 2007; Mansueto et al., 1997). Additionally, the influence of comorbid OCD (cf. Christenson et al., 1993; Mansueto et al., 1997) can be ruled out as having contributed to the relationships between clinically significant TTM symptoms and negative self-beliefs as identified in Study 4 (Chapter 8) because no participants were diagnosed with this disorder.

Besides one previous study in which low self-esteem was not found to be associated with TTM (Soriano et al., 1996), several studies have indeed reported low self-esteem and high levels of shame in TTM samples using both qualitative and quantitative methodologies (Casati et al., 2000; Diefenbach, Tolin, Hannan, et al., 2005; du Toit et al., 2001; Hersperger, 2012; Larson, 2007; Noble, 2012; Norberg et al., 2007; Scott & Stevenson, 2015; Stemberger et al., 2000). As summarised in section 8.4, however, much of this research is grey literature (e.g., Scott & Stevenson, 2015), and only three studies compared self-esteem or shame among participants with TTM symptoms compared to non-clinical control groups (Diefenbach, Tolin, Hannan, et al., 2005; Noble, 2012). Furthermore, only Diefenbach, Tolin, Hannan, et al. (2005) controlled for the influence of depression. While self-esteem was a significant predictor of hairpulling severity above and beyond depression symptoms, accounting for depression meant that self-esteem did not differentiate between TTM participants and healthy control participants (Diefenbach, Tolin, Hannan, et al., 2005). To date, this is the extent of the literature investigating the relationships between constructs relating to

negative self-evaluations and TTM. As such, the findings of this thesis provide valuable confirmation that negative self-evaluations are relevant to TTM and suggest that these relationships are not simply the result of comorbid mood psychopathology.

It is perhaps unsurprising that negative self-beliefs are associated with TTM. At any stage of the lifespan, women with TTM typically report 30 – 70% of total hair loss from their targeted hairpulling site/s (Flessner et al., 2009). Disorder onset occurs between the ages of six and 18 for the majority (80%) of affected individuals, and has a chronic trajectory, with average symptom duration lasting over 20 years (Christenson, Mackenzie, et al., 1991; du Toit et al., 2001; Winchel, Jones, Stanley, et al., 1992). The disability and distress associated with TTM has been well documented (e.g., Tung et al., 2015; refer to section 2.4.4 for a summary). It is plausible that the severity of hairpulling *frequency* might lead to negative self-beliefs including shame and low self-worth. For instance, participants have provided subjective descriptions of the way a perceived lack of control over one's own unwanted, harmful behaviour influences feelings of ineptness or personal weakness (Diefenbach, Tolin, Hannan, et al., 2005). du Toit et al. (2001, p. 253) reported that one quarter (n = 12) of their sample with TTM attributed their disorder to being "weak-willed". The influence of perceived low self-control upon negative self-evaluations was reported by participants during the qualitative interviews presented in this thesis; for example (participant 5, Study 1, Chapter 6), "It makes me feel, in a way, less worthy as a person because I've done this, you know – that I couldn't find a better way to deal with my problems."

Alternatively, but not necessarily to the exclusion of the previous interpretation, the severity of *actual hair loss* and the impact this has upon one's physical appearance may contribute to negative self-beliefs. Hair is an important tool for self-expression and for conveying information about one's identity. Social status, conformity to social group

norms, racial and cultural identity, sexuality and gender identity, and even personality traits can all be conveyed via hair, and this symbolic importance of hair is found across genders and cultures (Basow & Braman, 1998; Cash, 2001; Hussain, 1992; J. R. Lewis, 2013; Moerman, 1988; Owens Patton, 2006; Synnott, 1987). Indeed, there is substantial literature on the way hair loss due to medical conditions (e.g., alopecia areata, androgenic alopecia) and treatments (e.g., chemotherapy) impacts upon a person's self-esteem and self-concept (for reviews, see Cash, 1999; Hunt & McHale, 2005; McGarvey, Baum, Pinkerton, & Rogers, 2001). As one woman with alopecia areata explained (Hunt & McHale, 2004, cited by Hunt & McHale, 2007, p. 362): "When I looked in the mirror the person I saw looking back was not me. It was someone else. [...] I am now a different person and I behave differently with people." Themes of feeling exposed, vulnerable, abnormal, and as though one's identity is being falsely represented due to medical hair loss have also been reported (Baum & McGarvey, 1999, as cited by McGarvey et al., 2001; Hilton et al., 2008; Hunt & McHale, 2007).

Surprisingly, there has been no such research investigating the relationships between self-construals and TTM even though hair loss resulting from TTM is self-inflicted. As mentioned earlier, perceived a lack of control over one's own harmful behaviour is likely to have an adverse impact upon self-appraisals. Commenting on her decision to shave her scalp hair following a bout of severe hairpulling, the sentiment regarding one's hair loss as misrepresenting one's identity was articulated by a participant of the current research (participant 4, Study 1, Chapter 6); "It makes me look like I'm trying to present in a particular way to the world, which is not my intention. [...] I feel that people think I'm trying to be, you know, modern or cool or trendy or fashionable or something like that, and I'm definitely not." Another participant reported that she felt like "a whole new person" when her eyebrows grew back after a period of

symptom remission (participant 7, Study 1, Chapter 6). These statements reflect similar qualitative findings that implicate a relationship between TTM and identity reported by participants in another study (Hersperger, 2012, p. 35); "When I relapsed, I just didn't feel complete anymore. And I still don't feel complete."

Thus far, the findings of this thesis regarding the relationships between TTM and negative self-beliefs have been interpreted in line with existing models of the disorder, which posit that self-related constructs including self-esteem, self-worth, and shame are *consequences* of TTM. For instance, Franklin and Tolin (2007) suggested that negative self-evaluations result from the adverse social and emotional consequences of TTM, which over time, become independent cues that elicit hairpulling episodes. Summarising the research on shame in TTM and SPD, Weingarden and Renshaw (2014) similarly proposed that the symptoms and behaviours involved in these disorders are likely to elicit and perpetuate shame, triggering further episodes of pulling and picking. However, Weingarden and Renshaw did not speculate on the *function* BFRBs might serve in the context of shame; why is it that shame might elicit further pulling or picking?

Higher levels of focused hairpulling have been found to correspond with greater levels of experiential avoidance (Houghton et al., 2014) and were associated with greater endorsement of negative self-beliefs in the current research (Studies 2 – 4). Additionally, there is preliminary evidence that experiential avoidance fully mediated the relationships between shame-related cognitions and hairpulling severity (Norberg et al., 2007). Taken together, these findings could suggest that focused hairpulling acts as a behavioural strategy that helps the individual to disengage from or neutralise threats to one's sense of self-worth, which is core to the experience of shame; an intense feeling of pain, discomfort or anger directed at the self for being "no good, inadequate, and

unworthy" (Blum, 2008, p. 94). Interestingly, recent experimental evidence has found that compulsions experienced by participants with either non-clinical or clinical symptoms of OCD served to neutralise threats to participants' self-worth (Ahern et al., 2015). Similarly, Buhlmann et al. (2009) found that individuals with BDD implicitly associated physical attractiveness with a sense of competence, leading to speculation that appearance-related ideation and compulsions may be driven by a desire to fix perceived appearance defects in order to buffer one's sense of competence and self-esteem.

Reflecting on the increasing evidence for the role of self-construals in OCRDs – that is, how individuals construct and affirm their sense of self and self-worth – Moulding, Mancuso, Rehm, and Nedeljkovic (2016) tentatively proposed that individuals with TTM may be particularly vulnerable to experiencing negative self-beliefs (i.e., shame proneness). Individuals who are prone to experiencing shame are more likely to experience threats to their self-concept, and as such, are vulnerable to developing psychological maladjustment (Tangney, Wagner, & Gramzow, 1992). Shame proneness is also associated with dissociative behaviour (Irwin, 1998; Talbot, Talbot, & Tu, 2004), which was reported by all participants in Study 1, and is increasingly being recognised as an element of TTM phenomenology (Lochner et al., 2004; Lochner, Simeon, Niehaus, & Stein, 2002). As one of our participants explained (participant 7, Study 1, Chapter 6), "You're also thinking about how bad you are. I guess it, um, I guess that's a feeling you want away, so you want to pull and take that feeling away." Hence, Moulding et al. tentatively suggested that, beyond experiential avoidance, shame-bypassing (H. B. Lewis, 1971; M. Lewis, 1995) may also be a function of hairpulling as a form of protecting against repeated threats to one's sense of self-worth.

It is important to note that, contrary to the aforementioned hypotheses, the single study that has investigated the multidimensional nature of shame in TTM found no relationships between symptom severity and characterological shame (Noble, 2012), and overall support for the bypassed shame model of psychopathology is limited (Platt, 2014). Indeed, the role of shame proneness and bypassed shame in TTM is strictly hypothetical, and requires examination with experimental and longitudinal research paradigms.

9.2.2.2 Perfectionism and control. Perfectionism and control was another theme that received repeated support as cognitive constructs of relevance to TTM throughout the empirical studies of this thesis. Qualitatively, perfectionism was discussed by participants in relation to hair qualities, in that hairs perceived as imperfect (e.g., asymmetrical, coarse, grey, etc.) were targeted for removal. Preference for removing hairs with these tactile and visual properties has been repeatedly documented (e.g., Duke et al., 2009; Duke, Keeley, Ricketts, et al., 2010; for a summary, see section 2.3.1). However, participants in Study 1 offered additional insight into why these imperfect hairs were particularly important to remove; because their removal provided a sense of mastery or control, which in itself was experienced as pleasurable and reinforcing. For example (participant 3, Study 1, Chapter 6); “That’s the hair that shouldn’t be there but I can take it out. And then it’s kind of cleaner that it’s not there.” Mansueto et al. (1999) similarly proposed that the automatic cognitions following achievement of a hairpulling goal could be reinforcing (e.g., “now my eyelashes are symmetrical”, p. 30), but the findings of this thesis suggest that the reason why such goal-achievement may be so reinforcing is because attaining perfect hair qualities may affirm overvalued beliefs about the importance of perfectionism and control.

Participants in the qualitative study indicated that obtaining a sense of control was perceived as highly important to them. While there was strong ambivalence about one's control over the hairpulling behaviour itself, participants simultaneously described how hairpulling provided a sense of control over aspects of their environment that they perceived as beyond their control (participant 8, Study 1, Chapter 6); "I think that I, I must use it as a mechanism to help me cope with other things that aren't going right in my life, so I turn to that [hairpulling] to try and control those things. I, if I don't have control over those bad things, I'll do this [pull] and I have control over this." Similar themes were reported by participants in another qualitative study (Hersperger, 2012, p. 34); "I have power, this is something I can control. This is something you can do when you want, how you want, where you want."

While it was unanticipated that elements of perfectionism and control would emerge as a single construct via analysis of the BiTS factor structure, this makes theoretical sense given that multidimensional conceptualisations of perfectionism are comprised of cognitive and behavioural strivings for certainty, goal-achievement, and avoiding failure and mistakes (Egan et al., 2011). Additionally, these constructs hold particular significance for other OCRDs. Participants with BDD and OCD have been found to report higher levels of perfectionism than control participants, particularly on a subscale measuring concern over mistakes, which reflects a tendency to interpret imperfections as equivalent to failure (Buhlmann et al., 2008). Relatedly, individuals with BDD have been found to implicitly associate being attractive with being competent, leading Buhlmann et al. (2009) to speculate that compulsive attempts to fix perceived appearance defects may be related to attempts to portray oneself as competent (and ultimately, safeguard against threats to self-esteem). Desire for control, which entails a preference to manipulate situations to avoid failure and achieve desired

outcomes (Burger & Cooper, 1979), has also been linked to OCD (Moulding & Kyrios, 2006). Specifically, a discrepancy between having a high desire for control, but low sense of control over a situation, may be a source of distress that motivates compulsions to ameliorate perceived threats to oneself, and within the environment (Moulding & Kyrios, 2006; Moulding et al., 2008, 2009).

Beyond the qualitative findings of this thesis, perfectionism/control as measured by the BiTS was found to be significantly correlated with hairpulling severity to a moderate degree for participants who reported engaging in non-cosmetic hairpulling behaviours, and to a large degree for participants with clinically significant TTM symptoms, including those meeting *DSM-5* diagnostic criteria. Additionally, perfectionism/control significantly differentiated between participants with and without TTM symptoms while controlling for the influence of depression (Study 4, Chapter 8). However, unlike the specificity of negative self-beliefs, perfectionism/control was not found to significantly predict hairpulling/TTM symptoms when controlling for anxiety and/or depression in any of the empirical studies. This suggests that although it is associated with TTM symptomatology, perfectionism/control may not be specific to it – these beliefs may indeed be associated with the disorder via the influence of comorbid mood and anxiety disorders, as Mansueto et al. (1997) postulated. As reviewed above, constructs relating to perfectionism and control are associated with other OCRDs (Buhlmann et al., 2008; Moulding et al., 2008, 2009), and perfectionism specifically is considered a transdiagnostic process implicated in range of psychopathologies, including depression and anxiety (Egan et al., 2011).

Clinicians treating children, adolescents, and adults with TTM have acknowledged the importance of targeting perfectionism during treatment (Golomb & Vavrichek, 2000; Novak, 2014; Pélissier & O'Connor, 2004). However, as with the

literature on negative self-beliefs, there is a paucity of evidence for relationships between TTM and perfectionism, and especially between TTM and control beliefs. Wide methodological variations among the few studies that have investigated perfectionism in TTM have produced somewhat inconsistent findings. Shusterman et al. (2009) described developing their own 15-item obsessiveness-perfectionism scale as part of an investigation into emotion regulation in 1,162 internet-surveyed participants with self-reported TTM symptoms. As found in the current research, they reported a significant moderate correlation between perfectionism and hairpulling severity (r = .57). Shusterman et al. additionally found that perfectionism significantly predicted hairpulling severity (p = .037) over and above worry, stress, experiential avoidance, and emotion dysregulation. Combined, all variables accounted for 10% of the variance in hairpulling severity.

Turning now to the grey literature in this area, Scott and Stevenson (2015) assessed relationships between hairpulling severity and perfectionism, as measured by several scales including the FMPS (Frost et al., 1990) and Almost Perfect Scale-Revised (APS-R; Slaney, Rice, Mobley, Trippi, & Ashby, 2001). They reported that levels of perfectionism on all scales were significantly greater among 116 participants who scored ≥10 on the MGHHPS compared to 107 control participants with no self-reported hairpulling behaviours. Additionally, perfectionism on all scales positively correlated with hairpulling severity; however, symptoms of anxiety and/or depression were not controlled for in these analyses. As part of a dissertation, Noble (2012) also utilised the APS-R and found that 114 participants who endorsed non-cosmetic hairpulling resulting in noticeable hair loss (*DSM-IV* criterion A, APA, 2000) reported significantly greater discrepancies between standards for performance and self-reported actual performance (i.e., maladaptive perfectionism) than did 287 control participants. However, there were

no significant relationships between APS-R scores and hairpulling severity in the TTM sample.

Finally, among 24 participants with BFRBs (*n* = 6 with hairpulling), levels of perfectionism as measured by the FMPS (Frost et al., 1990) were no different to those reported among 23 HC participants (Roberts et al., 2015). However, compared to HC participants, BFRB participants reported a more maladaptive style of everyday planning and organisation as measured by the STOP (O'Connor et al., 2015), which Roberts et al. (2015, p. 195) likened to a kind of "organisational perfectionism." Roberts et al. additionally found that this maladaptive style of planning correlated with higher levels of emotion dysregulation in the BFRB group. The authors speculated that this may be taken as support for the frustrated action model of BFRBs, which suggests that because individuals with BRFBs have a vulnerability to emotion dysregulation (particularly for frustration, stress, and boredom), they may try to compensate for this by imposing higher standards for activity planning and organisation. When high standards for activity are appraised as having not been achieved, individuals with BFRBs engage in behaviours such as hairpulling and skin picking to generate a sense of action or productivity, and thereby ameliorate the tension created by the perceived discrepancy (Roberts et al., 2015).

Interestingly, there are some parallels between the constructs of the STOP as a measure of organisational perfectionism and the BiTS-PC. For instance, BiTS-PC items reflect discomfort with non-resolution of tasks and activities (e.g., "I become increasingly uncomfortable the longer I am unable to complete something I may have been working on") and a desire to fix or resolve problems in order to meet exacting standards (e.g., "I experience strong urges to fix anything that I perceive to be wrong, imperfect or not-quite-right"). This may be taken as indirect support for the frustrated

action model as being relevant not just to BFRBs, but to TTM, specifically. However, this interpretation contrasts with that offered by the qualitative findings reported in this thesis relating to attaining a desired sense of control via manipulation and removal of imperfect hairs. Neither interpretation is mutually exclusive of the other, however. Each raises potentially fruitful areas for continued research into the role, specificity, and multidimensional nature of perfectionism and control constructs in TTM, to be proposed in section 9.6.

9.3 Limitations

The methodological limitations of each study comprising this thesis have been previously acknowledged, however, it is necessary to revisit and discuss some key limitations before considering the theoretical and practical implications of the current findings.

The small and homogenous sample of participants in Study 1 limits the generalisability of the six identified themes of dysfunctional beliefs to other individuals with TTM. This is particularly relevant for individuals who: (a) are not as highly educated as were the participants in this particular sample; (b) for individuals who may experience extreme levels of shame and disability, and as such, may not have been represented by the participants who consented to discuss their experiences in an electronically-recorded, in-depth interview; (c) for individuals who may lack insight into the cognitions that contribute to their hairpulling episodes; and (d) for men with TTM, as the qualitative sample was comprised solely of women. To the author's knowledge, this is the first study that has investigated the phenomenology of TTM in an Australian population. Interestingly, the demographic characteristics of the TTM sample in Study 4 were very similar to those of Study 1, in that the majority of participants

were female, well-educated, and not partnered. Comparison of cross-cultural differences in TTM is lacking, and until greater TTM research occurs in Australia, the relative similarities between the demographic and clinical characteristics of Australian and international TTM samples will remain unknown. Nevertheless, the similarity in demographic characteristics in Studies 1 and 4 could have resulted from the sampling methods used, as clinical participants in both studies were recruited via support groups organised by the Anxiety Recovery Centre of Victoria, and though online advertisements to TTM-specific peer support forums. Hence, participants were likely to have been actively seeking information about, and support for, TTM when they saw the research advertisements.

Given that the content of the BiTS items were developed on the basis of qualitative themes derived from a homogenous group of eight female, Australian residents with TTM, it could be argued that the constructs represented in the BiTS – negative self-beliefs, perfectionism/control, and emotional avoidance – are ultimately a reflection of the cognitions that were identified within a non-representative TTM sample. However, the qualitative themes identified in this research have been similarly reflected in other qualitative studies examining the impact of, and treatment outcomes associated with, TTM (Casati et al., 2000; Hersperger, 2012; Walderhaug, 2015). Furthermore, the final three BiTS constructs have been repeatedly implicated in TTM on the basis of clinical observations, and across a range of methodologically diverse studies (e.g., Larson, 2007; Norberg et al., 2007; Novak, 2014; Pélissier & O'Connor, 2004; Roberts et al., 2013; Rufer et al., 2014; Scott & Stevenson, 2015; Stemberger et al., 2000; Weingarden & Renshaw, 2014). In other words, negative self-beliefs, perfectionism/control, and emotional avoidance appear to be salient cognitive-affective

processes in the TTM literature, as corroborated by the relatively consistent qualitative and quantitative findings reported in this thesis.

It is a limitation that the final 13-item BiTS that the three constructs it represents were derived from an EFA conducted within a pooled sample of participants irrespective of their endorsement of problematic, non-cosmetic hairpulling behaviours. As acknowledged in Chapter 8, samples with different demographic and/or clinical characteristics can produce unique factors (Tabachnick & Fidell, 2007). The decision to pool the samples was justified on the basis that non-cosmetic hairpulling behaviours have been found to range on a continuum from non-clinical to clinical (Stanley et al., 1994), and that even non-clinical levels of hairpulling are associated with similar patterns of affect regulation as those reported among participants with clinically significant TTM symptoms (Ghisi et al., 2013; Stanley et al., 1995). As such, it was necessary to replicate the BiTS factor structure in a new pooled sample of participants with and without self-reported, non-cosmetic hairpulling behaviours, and to provide support for the invariance (i.e., equivalence) of the BiTS measurement model between these groups. The required support for the BiTS factor structure replication and measurement invariance was obtained within Study 3. The findings of Study 4 further supported that the psychometric properties of the BiTS are sound for participants whose symptoms met full or subthreshold *DSM-5* criteria for TTM. Nevertheless, it will be invaluable for future research to continue evaluating the factor structure of the BiTS in diverse samples of participants with varying degrees of TTM symptomatology to ensure its stability, as has been done for the evaluation of the analogous measure of OCD-relevant beliefs, the OBQ (e.g., Abramowitz et al., 2014; Moulding et al., 2011; OCCWG, 2005; Wu & Carter, 2008).

As previously acknowledged, the construct validity of the BiTS-EA subscale requires further evaluation. Its moderate correlations with measures of experiential avoidance, distress intolerance, and emotion dysregulation suggest that while the BiTS-EA taps into these constructs, it is measuring something quite different. Measuring its relationship with alexithymia (cf. Rufer et al., 2014) could be illuminating, as two items make reference to negative appraisals of verbally expressing unpleasant emotions. The conceptual clarity of the BiTS-PC subscale may similarly benefit from ongoing evaluation of its construct validity, particularly in light of its similarities with the construct of organisational perfectionism captured by the STOP (O'Connor et al., 2015). Overall, evidence for the psychometric properties of the BiTS must be considered preliminary until broader examination of construct validity occurs, and internal consistency is replicated in other samples. Test-retest reliability was not evaluated, and this requires examination in future research.

It will also be necessary that future research evaluates the relationships between TTM-relevant cognitions as measured by the BiTS and TTM symptoms in a range of populations to support the conclusion that negative self-beliefs and perfectionism/control are especially pertinent to the disorder. This will be particularly important given that, controlling for mood symptoms, the BiTS factors accounted for only 4 – 5% of the variance in non-cosmetic hairpulling behaviours in Studies 2 and 3. The small proportion of variance explained may reflect that dysfunctional cognitions comprise just one factor of a vast array of biopsychosocial factors that contribute to the onset and maintenance of this complex disorder (e.g., Franklin & Tolin, 2007). Indeed, previous research in which emotion regulation variables were found to account for only 10% of the variance in self-reported TTM symptoms (Shusterman et al., 2009) went on to facilitate the development of an effective treatment (e.g., DBT-enhanced CBT;

Keuthen et al., 2012). Future research may also discover that the proportion of variance explained by the BiTS is increased when relationships between cognitions and hairpulling behaviours are examined in individuals with *DSM*-diagnosed TTM, as opposed to self-reported, non-cosmetic hairpulling behaviours in an internet-surveyed sample.

Although Study 4 attempted to overcome the limitation of using a non-clinical sample, it was still limited by including participants whose symptoms met subthreshold *DSM-5* criteria for TTM, in addition to the overall small sample size of 20 clinical participants. Indeed, the small sample of clinical participants contributed to inadequate statistical power to detect significant relationships between TTM-relevant beliefs and symptoms (refer to Appendix KK); hence the pooled sample of symptomatic and non-symptomatic participants was used to assess these relationships. The likelihood of a Type II error (false negative) was similarly demonstrated in the results of the logistic regression, as perfectionism/control was not found to significantly predict TTM group membership when controlling for depression symptoms, but may have demonstrated a trend towards significance ($p = .087$). Challenges with recruiting a sufficient number of diverse participants with hairpulling/TTM symptoms was also evidenced in Studies 3 and 4, whereby an inadequate number of male participants meant that gender-based differences in the relationships between TTM-relevant beliefs and symptoms could not be tested. It will therefore be necessary to reproduce the findings of this thesis using a larger and demographically varied sample of participants with clinically significant TTM symptoms, including those whose symptoms meet strict *DSM-5* criteria.

Finally, the cross-sectional nature of the empirical studies within this thesis means that the directionality and causality of relationships identified between TTM-relevant beliefs and symptoms cannot be established. It remains unknown whether

negative self-beliefs and perfectionism/control act as vulnerability factors that increase the likelihood of a person developing TTM within the context of various other bipsychosocial predisposing factors. Referring to theorising by Moulding et al. (2016), it was suggested that the relationships between negative self-beliefs and TTM symptoms may reflect shame proneness as a vulnerability factor influencing the development of TTM, such that individuals engage in hairpulling behaviours to deflect from or neutralise repeated threats to self-worth. Alternatively, and consistent with current formulations of TTM (Franklin & Tolin, 2007; Mansueto et al., 1997; Stemberger et al., 2000; Weingarden & Renshaw 2014), negative self-beliefs may be consequences of the disorder in relation to its adverse psychosocial impacts and/or due to the frustrating and disempowering lack of self-control one feels for their own unwanted behaviour. Similarly, while perfectionism can be conceptualised as a predisposing personality trait (Egan et al., 2011), it is also possible that as TTM symptoms become more severe, the individual engages in increasingly perfectionistic ideation to retain a sense of control over their dysreglated hairpulling behaviour and associated affect. As similarly proposed within the frustrated action model, BFRBs such as hairpulling might become used as strategies for instilling or regaining a sense of high productivity (Roberts et al., 2015), and possibly, a sense of highly desired control. Such hypotheses can only be tested using experimental and longitudinal research designs; both of which are scarce in the TTM literature.

9.4 Theoretical Implications

The aforementioned limitations in mind, the findings of this thesis have the potential to both extend and inform existing cognitive and behavioural models of TTM. Primarily, the findings suggest that dysfunctional cognitions and beliefs are influential to the precipitation and maintenance of hairpulling episodes, and that negative self-

evaluations in particular predict hairpulling severity over and above depression and anxiety symptoms.

In Chapter 6, a preliminary cognitive model of TTM was proposed on the basis of the in-depth qualitative interview findings, which extended Gluhoski's (1995) cognitive model and could be integrated with behavioural models (Franklin & Tolin, 2007; Mansueto et al., 1997, 1999, Stemberger et al., 2003). The model is replicated below in Figure 6.1. To summarise, it was suggested that negative self-beliefs and/or a perceived general lack of control elicited hairpulling behaviour directly, but also precipitated dysphoric affect, unhelpful beliefs about the meaning of negative affect, and negative appraisals of one's coping ability. These factors elicited permission-giving cognitions (e.g., "I'll just pull one"), appraisals of poor self-control, and perfectionistic standards for hair quality, which rationalised engagement in hairpulling behaviours. Ultimately, these cognitive factors were suggested to develop a feedback loop whereby negative self-beliefs and a low sense of control was reinforced, contributing to further hairpulling in the absence of any inhibitory factors.

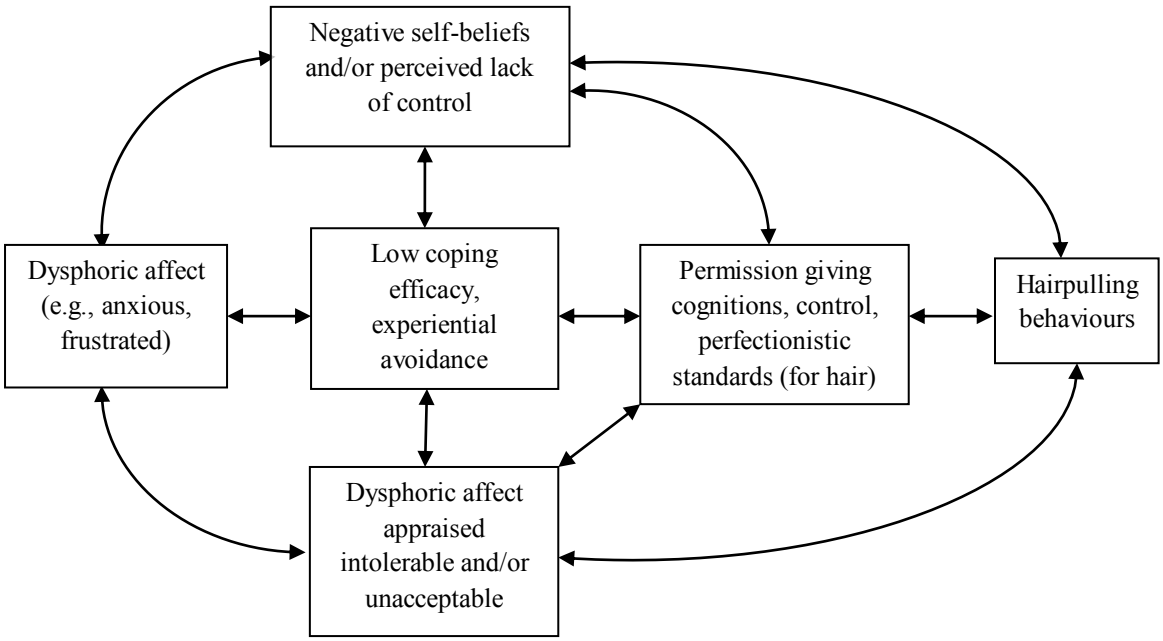

Figure 6.1. Preliminary model of identified cognitions and beliefs in TTM. Some possible relationships between constructs have been noted, but directions of effects are preliminary.

Based on the quantitative findings obtained in Studies 2 – 4, and couched within the existing literature on the role of cognitive-affective processes in TTM, an adapted cognitive model of TTM is now proposed, and with empirical testing, may be generalisable to a wider population of individuals with clinically significant non-cosmetic hairpulling behaviours. The relationships proposed in this model have given weight to the findings of Study 4 because the diagnostic profile of all participants in this study was verified via structured diagnostic interviews, including diagnoses of symptoms meeting full or subthreshold *DSM-5* criteria for TTM. Of course, this model must still be considered preliminary; its primary purpose is for generating testable hypotheses that can be examined in future research. This new model is displayed in Figure 9.1.

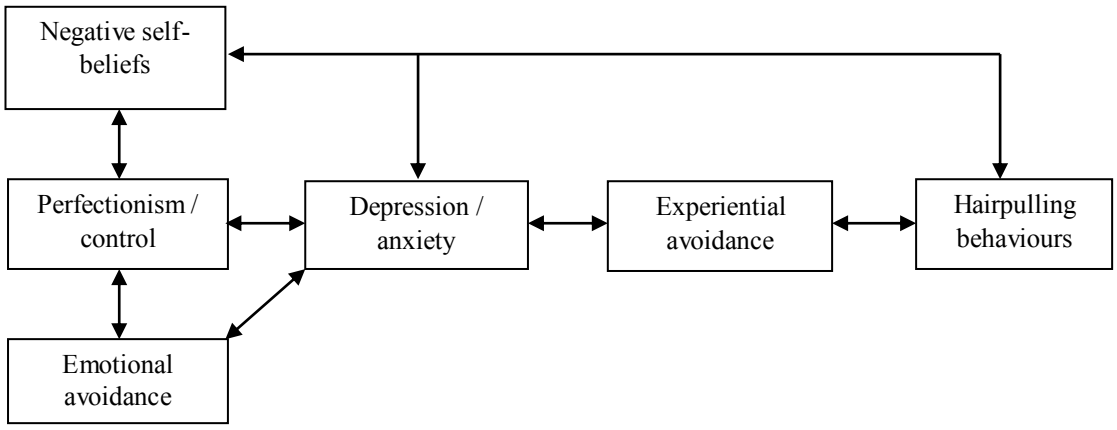

Figure 9.1. Preliminary cognitive-affective model of TTM. Some possible relationships between constructs have been noted, but directions of effects are preliminary.

On the basis of the results of Studies 2 – 4, the adapted model suggests that negative self-beliefs have a direct influence in eliciting and maintaining hairpulling episodes, over and above the influence of depression and anxiety symptoms. It is additionally suggested that the relationship between negative self-beliefs and hairpulling behaviour is not necessarily mediated by experiential avoidance. While not examined in the current thesis, this relationship is in line with suggestions by Franklin and Tolin (2007) and Weingarden and Renshaw (2014), in that with repeated hairpulling, negative self-evaluations and shame can become independent triggers of symptoms. However, this does contrast with Norberg and colleague's (2007) finding that experiential avoidance fully mediated the relationships between hairpulling severity and shame-related cognitions (although in their study, shame was measured in terms of participants' appraisals of how *others* perceived their self-worth). As previously explained, it may also be that this relationship is mediated by shame bypassing (Moulding et al., 2016), and these possible pathways to hairpulling behaviours will require testing.

Similarly, others have suggested that the relationships between hairpulling and perfectionism are mediated by low self-esteem and/or shame (Noble, 2012; Scott & Stevenson, 2015). Noble (2012) reported that behavioural shame mediated the relationship between maladaptive perfectionism and hairpulling severity among 114 adults who self-reported non-cosmetic hairpulling resulting in noticeable hair loss (criterion A, APA, 2000). Noble proposed that individuals with TTM symptoms feel ashamed of failing to meet their behavioural standards (maladaptive perfectionism), which perpetuates shame about their repeated hairpulling and leads to increased hairpulling severity. However, the influence of depression was not controlled for within this study nor was psychiatric comorbidity assessed. Given that the findings of this thesis did not find that perfectionism/control predicted hairpulling severity over and above comorbid mood symptoms, the proposed model suggests that the association between TTM symptoms and perfectionism/control is accounted for by anxiety and depression. This is consistent with Mansueto and colleague's (1997) hypothesis that perfectionistic ideation in TTM may reflect depressive or obsessive-compulsive symptomatology. As such, the model suggests that a feedback loop between perfectionism/control, negative self-beliefs, and depression/anxiety can develop, which activates an experientially avoidant coping repertoire (cf. Norberg et al., 2007) and hairpulling behaviours.

The model similarly suggests that emotional avoidance-related beliefs may also relate to hairpulling behaviours via depression and anxiety symptoms, and a coping repertoire characterised by experiential avoidance. This suggestion is especially tentative, given that emotional avoidance did not significantly differentiate between participants with and without clinically significant TTM symptoms after controlling for depression in Study 4, and accounted for the least proportion of variance in hairpulling

severity across Studies 2 – 4. It may be that emotional avoidance is simply a facet of general difficulties with emotion dysregulation in TTM, and therefore does not contribute sufficient variance to hairpulling severity because it only captures an element of this broader factor. Indeed, emotion dysregulation is postulated to be a vulnerability factor underlying the aetiology of BFRBs, including hairpulling (Roberts et al., 2013), and there is growing evidence in support of improved emotion regulation and psychological flexibility as behaviour change mechanisms in the treatment of TTM (e.g., Keuthen et al., 2011, 2012; Woods, Wetterneck, et al., 2006).

In addition to extending the literature on the relationships between TTM symptoms and dysfunctional cognitions and beliefs, this thesis provided some of the first evidence that focused hairpulling, as operationalised by Flessner, Woods, et al. (2008), is indeed associated with cognitions Throughout Studies 2 – 4, focused hairpulling significantly correlated with the BiTS total scores (range of r = .25 – .62). On the basis that focused hairpulling, but not automatic hairpulling, is described as that which is intentionally performed in response to unpleasant cognitions, emotions, and sensations (Flessner, Woods et al., 2008; Wetterneck & Woods, 2007), it could be argued that the model presented here is especially pertinent to focused hairpulling; in other words, this may be a cognitive model of focused hairpulling rather than a cognitive model of TTM. Interestingly, however, higher levels of automatic hairpulling were found to significantly correlate with greater negative self-beliefs to a small degree in Study 3 (r = .16). This relationship was unexpected because automatic hairpulling is not considered to be triggered by specific internal or external antecedents (Wetterneck & Woods, 2007). If replicated in future research, this finding could have significant implications for models and treatments of TTM.

For instance, Flessner, Conelea, et al. (2008) found that, compared to individuals with low-automatic and low-focused hairpulling, individuals with high-automatic but low-focused hairpulling were significantly less likely to have disclosed their TTM symptoms to another person, but more likely to have reported experiencing educational difficulties. The researchers suggested that individuals with high-automatic but low-focused hairpulling may be unlikely to seek treatment. Additionally, participants with high-automatic and high-focused hairpulling endorsed the greatest functional impact and distress of all groups. It is plausible that individuals with high levels of automatic hairpulling find the lack of control over their behaviour so shameful (cf. Noble, 2012) that they struggle to identify cognitive-affective antecedents; possibly because developing awareness of these experiences may pose an increased threat to their sense of self-worth (cf. Moulding et al., 2016). Investigating the role of implicit beliefs in TTM (as has commenced in relation to BDD; Buhlmann et al., 2009) may therefore support identification of unique disorder subtypes with particular patterns of automatic and/or focused hairpulling, and lead to identification of unique aetiologial and maintaining mechanisms underlying such subtypes.

9.5 Practical Implications

The findings of this thesis support the use of cognitive change strategies for the treatment of TTM, as have already been applied in the standard and third-wave CBT approaches reviewed in Chapter 4. However, the findings additionally point towards a justification for these psychological therapies as targeting negative self-beliefs and perfectionism/control cognitions in particular. To the author's awareness, negative self-beliefs and perfectionism/control are not explicitly targeted in existing protocols of CBT for TTM despite clinicians having previously recognised the importance of addressing

these two particular factors in treating this disorder (Golomb & Vavrichek, 2000; Novak, 2014; Pélissier & O'Connor, 2004).

As Noble (2012) advocated, addressing the impact of shame and its role in perpetuating symptoms could be highly beneficial to incorporate into TTM treatments. Formulating hairpulling as a coping behaviour that serves an important emotion regulation function (i.e., "something I do to cope") may help reduce the shame-related negative self-evaluations (e.g., "I'm worthless, I'm abnormal, I'm weak") that could be perpetuating TTM symptoms. Reducing negative self-evaluations and shame can potentially encourage greater disclosure of other "shameful", but risky and relatively common behaviours associated with TTM such as trichophagia. Novak (2014) additionally suggested that helping clients improve their sense of self-worth may also enhance engagement in therapy and commitment to behavioural change, as the individual realises that they are worthy of support and an improved quality of life. However, even beyond self-worth, the meaning that TTM has for one's sense of identity may be a particularly strong treatment barrier:

> Even if the hair puller or skin picker's self-perception is that of a defective person and therefore distressing, it is hard to let go of it – and harder for some than letting go of the BFRB itself. The familiarity of this painful self-image may make it easier to maintain than creating the tidal wave resulting from a shift to a sense of personal healthfulness and wholeness. (Novak, 2014, para. 16)

Indeed, this sense of TTM as having become entwined with one's identity was acknowledged by participants in Study 1 and in other qualitative studies (Hersperger, 2012). Clinicians must be mindful of the meaning TTM has for their clients' sense of self. Pursuing psychological treatment without due consideration of the ways in which

maintaining TTM symptoms may actually protect against feared changes to the client's sense of self and the multiple domains that contribute to it (e.g., work, education, relationships, etc.) can potentially increase the likelihood that the client will disengage from therapy, or experience unexpected depression or anxiety as TTM symptoms improve. This latter possibility reflects that hairpulling may be the client's primary emotion regulation strategy (cf. Roberts et al., 2013), and thus, to remove this strategy without supporting the client to learn adaptive emotion regulation and distress tolerance skills could expose their vulnerabilities in this domain. Alternatively, distress following improvement of TTM symptoms may relate to the client having gained insight into the adverse impact the disorder has had on their identity development. Although never empirically evaluated, these unexpected adverse consequences of symptom resolution may partially explain the high relapse rates following CBT for TTM.

Both standard and third-wave CBT approaches are well-placed to address such processes. For instance, ACT-enhanced HRT for TTM includes a component on values identification; that is, engaging in behaviours that affirm, and are consistent with, one's deeply-held values (Crosby et al., 2012; Twohig & Woods, 2004; Woods, Wetterneck, et al., 2006). In delivering ACT-enhanced HRT for TTM, Crosby et al. (2012, p. 600) reported that participants' cognitions regarding self-worth and self-efficacy were framed in terms of "just thoughts that they experienced" as opposed to "the content of who they are." However, there is no reason why therapeutic discussion regarding concepts of self cannot be expanded and integrated within treatment modules focused upon defining one's values as a reflection of one's identity; the ways in which hairpulling may detract from a positive sense of self; and how engaging in values-driven behaviours may ultimately improve one's sense of self-worth and self-esteem. Similarly, standard strategies for improving self-esteem as commonly included in CBT for depression

(Beck, 2011) may be more appropriate to include within existing CBT for TTM protocols, in addition to or in place of social-skills training, as was included in Toledo and colleague's (2014) CBT protocol for TTM.

Similarly, there is a wealth of CBT strategies for reducing maladaptive perfectionism, and which have been considered staples for treating OCD, BDD, depression, and various other disorders commonly comorbid with TTM (e.g., Clark, 2004; Veale & Neziroglu, 2010). Egan et al. (2011) systematically reviewed the role of perfectionism as a transdiagnostic process and found evidence that maladaptive perfectionism can impede engagement with treatment; and further, that even when perfectionism is the main target of treatment, symptoms of depression and anxiety also improve. Consistent with the revised cognitive model of TTM presented earlier (Figure 9.1), this might suggest that treating perfectionistic beliefs may improve TTM symptoms by reducing comorbid mood symptoms. Pélissier and O'Connor (2004) reported on the successful treatment of a 23 year old woman with TTM in which perfectionistic standards were the main target of her treatment. They utilised evidence-based CBT strategies for TTM, but maintained the focus of treatment upon cognitive restructuring "perfectionistic assumptions about self, and how such thoughts can provoke impatience or frustration" (p. 65), as these were the cognitive-affective cues typically associated with the client's hairpulling episodes. Through a collaborative therapeutic relationship, the client was supported to challenge her perfectionistic thoughts, replace them with more realistic thoughts, and to assume more adaptive expectations for activity planning and completion. Consistent with Egan and colleague's (2011) findings, reductions in depression and anxiety symptoms corresponded with improvements to the client's perfectionistic planning style (as measured with the

STOP), and an improved sense of control over hairpulling behaviours (Pélissier & O'Connor, 2004).

It is interesting to note that, like Pélissier and O'Connor (2004), Egan et al. (2011) also made reference to the importance of asking clients about the ways in which their perfectionistic beliefs relate to their sense of self-worth. Indeed, others have similarly suggested that perfectionism and self-construals are likely to interact to produce and maintain TTM symptoms (Noble, 2012; Scott & Stevenson, 2015). This suggests, as others have found in relation to OCD and BDD (e.g., Doron et al., 2007; Phillips et al., 2011), that individuals with TTM also experience their self-worth as contingent upon attaining perfectionistic standards within valued domains of self-concept (e.g., appearance, work, education, social acceptance, etc.). Exactly what self domains are especially relevant for individuals with TTM remains to be examined, however. Nevertheless, the evidence thus far does suggest that targeting both perfectionism/control and self-construals could be important behaviour change mechanisms to address in treatment.

As explained in Chapter 4, multi-component CBT interventions for TTM abound, yet limited research has begun to decipher which components are responsible for eliciting or maintaining behaviour change (Himle et al., 2004). Several researchers have suggested that component sequencing studies, direct comparisons of standard and third-wave CBT approaches with HRT, and the use of active control conditions ought to be prioritised in future trials of treatment for TTM (Franklin et al., 2011; Rehm et al., 2015; Slikboer et al., 2015; Woods, Wetterneck, et al., 2006). As a brief and valid measure of dysfunctional cognitions of particular relevance to TTM, the BiTS may offer a valuable contribution to the assessment of treatment progress, not only on an individual client level, but also within larger-scale CBT trials. Use of the BiTS in

treatment evaluations could support its ongoing psychometric evaluation, but could also potentially enhance our understanding of the cognitive-affective behaviour change mechanisms implicated in TTM, beyond experiential avoidance and emotion dysregulation. Ultimately, this may help researchers decipher which CBT components elicit and maintain the greatest symptom improvements, such that more effective, evidence-based iterations of CBT are applied to TTM, and on the basis of an evidence-based and integrated cognitive behavioural model of the disorder.

9.6 Conclusion and Future Directions

This thesis investigated the relationships between TTM symptoms and dysfunctional cognitions and beliefs via the development and psychometric validation of the Beliefs in TTM Scale (BiTS). Through this process, the overarching contention of this thesis, that dysfunctional cognitions and beliefs would be associated with TTM symptoms, was supported.

The BiTS demonstrated good internal consitency and construct validity; however, ongoing evaluation of its psychometric properties is required. In particular, future research will need to: (1) replicate the BiTS factor structure in a large, demographically diverse sample of participants with clinically significant TTM symptoms (i.e., as opposed to in a pooled sample of participants with and without self-reported non-cosmetic hairpulling behaviours); (2) establish its test-retest reliability; (3) further examine the construct validity of the emotional avoidance subscale in particular; and (4) investigate whether men and women with TTM symptoms endorse similar levels and types of dysfunctional cognitions. Negative self-beliefs, perfectionism/control, and a preference to avoid emotional expression were all found to correlate with hairpulling severity and focused hairpulling, in particular. However, only

negative self-beliefs significantly predicted TTM symptoms over and above depression in a clinical sample. Given the small proportion of variance that TTM-relevant beliefs contributed to TTM symptoms, however, it is important to acknowledge that dysfunctional cognitions are likely to represent just one factor of a vast array of biopsychosocial factors that contribute to the onset and maintenance of this complex disorder.

It is suggested that future research continues to investigate the relationships between TTM, the BiTS subscales, and validated measures of related cognitive-affective processes such as shame, self-esteem and self-efficacy, control beliefs, alexithymia, multidimensional perfectionism, and styles of planning. Such investigation may strengthen evidence for some of the relationships between TTM severity, hairpulling styles, and cognitions identified within this thesis, but mediation and moderation analyses (cf. Noble, 2012; Norberg et al., 2007) will be particularly valuable to discover the cognitive-affective mechanisms underlying the maintenance of TTM phenomenology. Given the cross-sectional design of the current research, it will also be important to investigate these processes using experimental and longitudinal methodologies. For example, replicating the mood-induction study of Roberts et al. (2015) or the hairpulling task used by Diefenbach et al. (2008), but monitoring the fluctuation of cognitions across the hairpulling cycle, could provide much-needed evidence that dysfunctional cognitions produce or are diminished by hairpulling. Similarly, examining longitudinal changes to TTM-relevant beliefs across the course of standard and third-wave CBT treatment trials could elucidate cognitive processes as important mechanisms of TTM symptom change.

Comparing levels of dysfunctional cognitions and beliefs to those in putatively related disorders like OCD, BDD, and tic disorders/TS could help determine whether

TTM is indeed a motorically-focused OCRD (Phillips et al., 2010), and provide further evidence in support (or otherwise) of its classification as an OCRD. Although the BiTS is considered a measure of TTM-relevant beliefs, the constructs it measures are nevertheless implicated in OCD and BDD in particular (e.g., Buhlmann et al., 2008; OCCWG, 2001, 2005; Phillips et al., 2011). Identification of the cognitive overlaps between these disorders could potentially help identify aetiological and maintaining factors in TTM and corresponding effective treatment approaches, which may have otherwise gone unconsidered. Relatedly, the strong correlations between the BiTS subscales and depression symptoms (particularly for negative self-beliefs) suggests a need to understand how depression may impact the cognitive and emotion regulation processes believed to influence hairpulling behaviour. Knowledge of these relationships is likely to have significant treatment implications for the 50% of individuals with TTM who also have comorbid affective disorders (e.g., Christenson, Mackenzie, et al., 1991; Lochner, Seedat, et al., 2005).

Overall, the findings of this thesis extend what is a very limited body of literature on the role of dysfunctional cognitions in TTM, and challenge behaviourally-focused models of the disorder to forge greater consideration for the influence and impact of dysfunctional cognitions and beliefs in the onset and maintenance of hairpulling behaviours. It is hoped that this research will act as a catalyst for continued research on the dysfunctional appraisals, beliefs, assumptions, and other cognitive phenomena in TTM. A preliminary cognitive model of TTM that proposed testable hypotheses was therefore presented in anticipation of such research.

References

Abramovitch, A. & Cooperman, A. (2015). The cognitive neuropsychology of obsessive-compulsive disorder: A critical review. *Journal of Obsessive-Compulsive and Related Disorders, 5*, 24-36. doi:10.1016/j.jocrd.2015.01.002

Abramowitz, J. S., Fabricant, L. E., Taylor, S., Deacon, B. J., McKay, D., & Storch, E. A. (2014). The relevance of analogue studies for understanding obsessions and compulsions. *Clinical Psychology Review, 34*, 206-217. doi:10.1016/j.cpr.2014.01.004

Abramowitz, J. S., Taylor, S., McKay, D., & Deacon, B. J. (2011). Animal models of obsessive-compulsive disorder. [Letter to the editor]. *Biological Psychiatry, 69*, 29-30. doi:10.1016/j.biopsych.2010.12.019

Ahern, C., Kyrios, M., & Meyer, D. (2015). Exposure to unwanted intrusions, neutralizing and their effects on self-worth and obsessive-compulsive phenomena. *Journal of Behavior Therapy and Experimental Psychiatry*. Advance online publication. doi: 10.1016/j.jbtep.2015.07.008

Adamowski, T., Ledzińska, S., & Kiejna, A. (2005). The obsessive-compulsive spectrum disorders - New diagnostic category? *Advances in Clinical and Experimental Medicine, 14*(2), 369-373.

Antony, M. M., Bieling, P. J., Cox, B. J., Enns, M. W., & Swinson, R. P. (1998). Psychometric properties of the 42-item and 21-item versions of the depression anxiety stress scales (DASS) in clinical groups and a community sample. *Psychological Assessment*, *10*, 176-181. doi:10.1037/1040-3590.10.2.176

Aleksandrowicz, M. K., & Mares, A. J. (1978). Trichotillomania and trichobezoar in an infant. Psychological factors underlying this symptom. *Journal of the American Academy of Child Psychiatry, 17*(3), 533-539.

Alfonso, M., Richter-Appelt, H., Tosti, A., Viera, M. S., & García, M. (2005). The psychosocial impact of hair loss among men: A multinational European study. *Current Medical Research and Opinion, 21*(11), 1829-1836. doi: 10.1185/030079905X61820

Al-Janabi, I. S., Al-Sharbaty, M. A., Al-Sharbati, M. M., Al-Sharifi, L. A., & Ouhtit, A. (2014). Unusual trichobezoar of the stomach and the intestine: A case report. *Journal of Medical Case Reports, 8*(1). doi: 10.1186/1752-1947-8-79

Altenburger, E. M., Tung, E. S., & Keuthen, N. J. (2014). Body esteem in adolescent hair pullers. *Journal of Behavioral Addictions, 3*(2), 124-127. doi:10.1556/JBA.3.2014.010

American Psychiatric Association. (1987). *Diagnostic and statistical manual of mental disorders* (3rd ed., revised) [DSM-III-R]. Washington, DC: Author.

American Psychiatric Association. (1994). *Diagnostic and statistical manual of mental disorders* (4th ed.) [DSM-IV]. Washington, DC: Author.

American Psychiatric Association. (2000). *Diagnostic and statistical manual of mental disorders* (4th ed., text revision) [DSM-IV-TR]. Washington, DC: Author.

American Psychiatric Association. (2013). *Diagnostic and statistical manual of mental disorders* (5th ed.) [DSM-5]. Washington, DC: Author.

Azrin, N. H., & Nunn, R. G. (1973). Habit reversal: A method of eliminating nervous habits and tics. *Behaviour Research and Therapy, 11*, 619-628.

Azrin, N. H., Nunn, R. G., & Frantz, S. E. (1980). Treatment of hairpulling (trichotillomania): A comparative study of habit reversal and negative practice training. *Journal of Behaviour Therapy and Experimental Psychiatry, 11*, 13-20.

Bandura, A. (1977). Self-efficacy: Toward a unifying theory of behavioral change. *Psychological Review, 84*(2), 191-215.

Barahal, H. S. (1940). The psychopathology of hair-plucking (trichotillomania). *The Psychoanalytic Review, 27,* 291-310.

Basow, S. A., & Braman, A. C. (1998). Women and body hair: Social perceptions and attitudes. *Psychology of Women Quarterly, 22*, 637-645. doi:10.1111/j.1471-6402.1998.tb00182.x

Bauer, C. C. (2014). *Re-examining the psychometric properties of the Massachusetts General Hospital hairpulling scale.* (Master's thesis). North Dakota State University, North Dakota. Retreived from http://gradworks.umi.com/15/68/1568409.html (1568409)

Beck, A. T. (1970). Cognitive therapy: Nature and relation to behavior therapy. *Behavior Therapy, 1*, 184-200. doi:10.1016/S0005-7894(70)80030-2

Beck, A. T. (1976). *Cognitive therapy and the emotional disorders.* New York: New American Library.

Beck, A. T., Rush, A. J., Shaw, B. F., & Emery, G. (1979). *Cognitive therapy of depression*. New York: The Guilford Press.

Beck, J. S. (2011). *Cognitive therapy: Basics and beyond*. New York: The Guilford Press.

Begotka, A. M., Woods, D. W., & Wetterneck, C. T. (2004). The relationship between experiential avoidance and the severity of trichotillomania in a nonreferred sample. *Journal of Behavior Therapy and Experimental Psychiatry, 35*(1), 17-24. doi:10.1016/j.jbtep.2004.02.001

Belluscio, B. A., Jin, L., Watters, V., Lee, T. H., & Hallett, M. (2011). Sensory sensitivity to external stimuli in Tourette syndrome patients. *Movement Disorders, 26*(14), 2538-2543. doi:10.1002/mds.23977

Berg, C. (1951). *The unconscious significance of hair.* London: Allen and Unwin.

Berlin, G. S., & Hollander, E. (2014). Compulsivity, impulsivity, and the DSM-5 process. *CNS Spectrums, 19*(1), 62-68. doi:10.1017/S1092852913000722

Bhar, S. S. & Kyrios, M. (2007). An investigation of self-ambivalence in obsessive-compulsive disorder. *Behaviour Research and Therapy, 45*, 1845-1857. doi:10.1016/j.brat.2007.02.005

Bloch, M. H. (2009). Trichotillomania across the life span. *Journal of the American Acadamy of Child and Adolescent Psychiatry, 48*(9), 879-883. doi:10.1097/CHI.0b013e3181ae09f3

Bloch, M. H., Landeros-Weisenberger, A., Dombrowski, P., Kelmendi, B., Wegner, R., Nudel, J., . . . Coric, V. (2007). Systematic review: Pharmacological and behavioral treatment for trichotillomania. *Biological Psychiatry, 62*(8), 839-846. doi:10.1016/j.biopsych.2007.05.019

Bluett, E. J., Homan, K. J., Morrison, K. L., Levin, M. E., Twohig, M. P. (2014). Acceptance and commitment therapy for anxiety and OCD spectrum disorders: An empirical review. *Journal of Anxiety Disorders, 28*, 612-624. doi:10.1016/j.janxdis.2014.06.008

Blum, A. (2008). Shame and guilt, misconceptions and controversies: A critical review of the literature. *Traumatology, 14*(3), 91-102. doi: 10.1177/1534765608321070

Blum, K., Braverman, E. R., Holder, J. M., Lubar, J. F., Monastra, V. J., Miller, D., … Comings, D. E. (2000). Reward deficiency syndrome: A biogenetic model for the diagnosis and treatment of impulsive, addictive, and compulsive behaviors. *Journal of Psychoactive Drugs, 32*, 1-112.

Bohne, A., Keuthen, N. J., Tuschen-Caffier, B., & Wilhelm, S. (2005). Cognitive inhibition in trichotillomania and obsessive-compulsive disorder. *Behaviour Research and Therapy, 43*(7), 923-942. doi:10.1016/j.brat.2004.06.014

Bohne, A., Savage, C. R., Deckersbach, T., Keuthen, N. J., & Wilhelm, S. (2008). Motor inhibition in trichotillomania and obsessive-compulsive disorder. *Journal of Psychiatric Research, 42*(2), 141-150. doi:10.1016/j.jpsychires.2006.11.008

Bollen, K. A., & Stine, R. A. (1993). Bootstrapping goodness-of-fit measures in structural equation models. In K. A. Bollen & L. S. Long (Eds.), *Testing structural equation models* (pp. 111-135). London: Sage Publications.

Bond, F. W., Hayes, S. C., Carpenter, K. M., Guenole, N., Orcutt, H. K., Waltz, T., & Zettle, R. D. (2011). Preliminary psychometric properties of the acceptance and action questionairre-II: A revised measure of psychological inflexibility and experiential avoidance. *Behavior Therapy, 42*, 676-688.

Bordnick, P. S., Thyer, B. A., & Ritchie, B. W. (1994). Feather picking disorder and trichotillomania: An avian model of human psychopathology. *Journal of Behavior Therapy and Experimental Psychiatry, 25*(3), 189-196. doi:10.1016/0005-7916(94)90019-1

Boughn, S., & Holdom, J. J. (2003). The relationship of violence and trichotillomania. *Journal of Nursing Scholarship, 35*(2), 165-170. doi:10.1111/j.1547-5069.2003.00165.x

Brown, T. A., White, K. S., Forsyth, J. P., & Barlow, D. H. (2004). The structure of perceived emotional control: Psychometric properties of a revised anxiety control questionnaire. *Behavior Therapy, 35*, 75-99.

Buhlmann, U., Etcoff, N. L., & Wilhelm, S. (2008). Facial attractiveness ratings and perfectionism in body dysmophic disorder and obsessive-compulsive disorder. *Journal of Anxiety Disorders, 22*, 540-547. doi:10.1016/j.janxdis.2007.05.004

Buhlmann, U., Teachman, B. A., Naumann, E., Fehlinger, T., & Rief, W. (2009). The meaning of beauty: Implicit and explicit self-esteem and attractiveness beliefs in

body dysmorphic disorder. *Journal of Anxiety Disorders, 23*, 694-702. doi:10.1016/j.janxdis.2009.02.008

Burger, J. M. & Coopers, H. M. (1979). The desirability of control. *Motivation and Emotion, 3*(4), 381-393.

Buxbaum, E. (1960). Hair pulling and fetishism. *The Psychoanalytic Study of the Child, 15,* 243-260.

Campbell, D. T. & Fiske, D. W. (1959). Convergent and discriminant validation by the multitrait-multimethod matrix. *Psychological Bulletin, 56*(2), 81-105.

Casati, J., Toner, B. B., & Yu, B. (2000). Psychosocial issues for women with trichotillomania. *Comprehensive Psychiatry, 41*(5), 344-351. doi:10.1053/comp.2000.9012

Cash, T. F. (1999). The psychosocial consequences of androgenetic alopecia: A review of the research literature. *British Journal of Dermatology, 141*, 398-405. doi:10.1046/j.1365-2133.1999.03030.x

Cash, T. F. (2001). The psychology of hair loss and its implicatons for patient care. *Clinics in Dermatology, 19*(2), 161-166. doi:10.1016/S0738-081X(00)00127-9

Cash, T. F., Price, V. H., & Savin, R. C. (1993). Psychological effects of androgenetic alopecia on women: Comparisons with balding men and with female control subjects. *Journal of the American Academy of Dermatology, 29*(4), 568-575. doi:10.1016/0190-9622(93)70223-G

Castle, D. J. & Phillips, K. A. (2006). Obsessive-compulsive spectrum of disorders: A defensible construct? *Australian and New Zealand Journal of Psychiatry, 40*(2), 114-120. doi:10.1111/j.1440-1614.2006.01757.x

Catanzaro, S. J. & Mearns, J. (1990). Measuring generalized expectancies for negative mood regulation: Initial scale development and implications. *Journal of Personality Assessment, 54,* 546-563.

Chamberlain, S. R., Fineberg, N. A., Blackwell, A. D., Robbins, T. W., & Sahakian, B. J. (2006). Motor inhibition and cognitive flexibility in obsessive-compulsive disorder and trichotillomania. *American Journal of Psychiatry, 163*(7), 1282-1284. doi:10.1176/appi.ajp.163.7.1282

Chamberlain, S. R., Fineberg, N. A., Menzies, L. A., Blackwell, A. D., Bullmore, E. T., Robbins, T. W., & Sahakian, B. J. (2007). Impaired cognitive flexibility and motor inhibition in unaffected first-degree relatives of patients with obsessive-compulsive disorder. *The American Journal of Psychiatry, 164*, 335-338.

Chamberlain, S. R., Hampshire, A., Menzies, L. A., Garyfallidis, E., Grant, J. E., Odlaug, B. L., . . . Sahakian, B. J. (2010). Reduced brain white matter integrity in trichotillomania a diffusion tensor imaging study. *Archives of General Psychiatry, 67*(9), 965-971. doi:10.1001/archgenpsychiatry.2010.109

Chamberlain, S. R., Menzies, L. A., Fineberg, N. A., Del Campo, N., Suckling, J., Craig, K., . . . Sahakian, B. J. (2008). Grey matter abnormalities in trichotillomania: Morphometric magnetic resonance imaging study. *British Journal of Psychiatry, 193*(3), 216-221. doi:10.1192/bjp.bp.107.048314

Chamberlain, S. R., Odlaug, B. L., Boulougouris, V., Fineberg, N. A., & Grant, J. E. (2009). Trichotillomania: Neurobiology and treatment. *Neuroscience and Biobehavioral Reviews, 33*(6), 831-842. doi:10.1016/j.neubiorev.2009.02.002

Chamberlain, S. R., & Sahakian, B. J. (2007). The neuropsychiatry of impulsivity. *Current Opinion in Psychiatry, 20*(3), 255-261. doi:10.1097/YCO.0b013e3280ba4989

Chang, C. H., Lee, M. B., Chiang, Y. C., & Lü, Y. C. (1991). Trichotillomania: a clinical study of 36 patients. *Journal of the Formosan Medical Association = Taiwan yi zhi, 90*(2), 176-180.

Chatterjee, K. (2011). The genetic factors influencing the development of trichotillomania. *Journal of Genetics, 90*(3), 259-262.

Chawla, N., & Ostafin, B. (2007). Experiential avoidance as a functional dimensional approach to psychopathology: An empirical review. *Journal of Clinical Psychology, 63*(9), 871-890. doi:10.1002/jclp.20400

Cheung, G. W. & Rensvold, R. B. (2002). Evaluating goodness-of-fit indexes for testing measurement invariance. *Structural Equation Modelling, 9*(2), 233-255. doi:10.1207/S15328007SEM0902_5

Christenson, G. A., Chernoff-Clementz, E., & Clementz, B. A. (1992). Personality and clinical characteristics in patients with trichotillomania. *Journal of Clinical Psychiatry, 53*(11), 407-413.

Christenson, G. A. & Crow, S. J. (1996). The characterization and treatment of trichotillomania. *Journal of Clinical Psychiatry, 57*, 42-49.

Christenson, G. A., Mackenzie, T. B., & Mitchell, J. E. (1991). Characteristics of 60 adult chronic hair pullers. *American Journal of Psychiatry, 148*, 365-370.

Christenson, G. A. & Mackenzie, T. B., & Reeve, E. A. (1992). Familial trichotillomania. [Letter to the editor]. *American Journal of Psychiatry, 149*(2), 283.

Christenson, G. A. & Mackenzie, T. B. (1995). Trichotillomania, body dysmorphic disorder, and obsessive-compulsive disorder. [Letter to the editor]. *Journal of Clinical Psychiatry*, 56(5), 211-212.

Christenson, G. A., Mackenzie, T. B., & Mitchell, J. E. (1994). Adult men and women with trichotillomania: A comparison of male and female characteristics. *Psychosomatics, 35*(2), 142-149.

Christenson, G. A., Pyle, R. L., & Mitchell, J. E. (1991). Estimated lifetime prevalence of trichotillomania in college students. *Journal of Clinical Psychiatry, 52*(10), 415-417.

Christenson, G. A., Ristvedt, S. L., & Mackenzie, T. B. (1993). Identification of trichotillomania cue profiles. *Behaviour Research and Therapy, 31*(3), 315-320.

Clark, D. A. (2004). *Cognitive-behavioural therapy for OCD*. New York: Guilford Press.

Cloningner, C. R. (1987). A systematic method for clinical description and classification of personality variants: A proposal. *Archives of General Psychiatry, 44*(6), 573-588. doi:10.1001/archpsyc.1987.01800180093014

Cloninger, C. R., Przybeck, T. R., & Svrakic, D. M. (1991). The tridimensional personality questionnaire: U.S. normative data. *Psychological Reports, 69*, 1047-1057. doi:10.2466/PR0.69.7.1047-1057

Coetzer, R., & Stein, D. J. (1999). Neuropsychological measures in women with obsessive-compulsive disorder and trichotillomania. *Psychiatry and Clinical Neurosciences, 53*(3), 413-415. doi:10.1046/j.1440-1819.1999.00565.x

Cohen, J. (1988). *Statistical power analysis for the behavioral sciences* (2nd ed.). Hillsdale, NJ: Lawrence Earlbaum Associates.

Cohen, L. J., Stein, D. J., Simeon, D., Spadaccini, E., Rosen, J., Aronowitz, B., & Hollander, E. (1995). Clinical profile, comorbidity, and treatment history in 123 hair pullers: A survey study. *Journal of Clinical Psychiatry, 56*(7), 319-326.

Cooper, M. J., Wells, A., & Todd, G. (2004). A cognitive model of bulimia nervosa. *British Journal of Clinical Psychology, 43*, 1-16.

Cortina, J. M. (1993). What is coefficient alpha? An examination of theory and applications. *Journal of Applied Psychology, 78*(1), 98-104. doi:10.1037/0021-9010.78.1.98

Costello, A. B. & Osborne, J. W. (2005). Best practices in exploratory factor analysis: Four recommendations for getting the most from your analysis. *Practical Assessment, Research and Evaluation, 10*(7), Retrieved from http://pareonline.net/pdf/v10n7.pdf

Courtney, M. G. R. (2013). Determining the number of factors to retain in EFA: Using SPSS R-menue v2.0 to make more judicious estimations. *Practical Assessment, Research and Evaluation, 18*(8), Retrieved from http://pareonline.net/getvn.asp?v=18&n=8

Cronbach, L. J. (1951). Coefficient alpha and the internal structure of tests. *Psychometrika, 16*(3), 297-334.

Crosby, J. M., Dehlin, J. P., Mitchell, P. R., & Twohig, M. P. (2012). Acceptance and commitment therapy and habit reversal training for the treatment of trichotillomania. *Cognitive and Behavioral Practice, 19*(4), 595-605. doi:10.1016/j.cbpra.2012.02.002

Cunningham, E. (2008). *A practical guide to structural equation modeling using AMOS*. Melbourne: Statsline.

Diefenbach, G. J., Mouton-Odum, S., & Stanley, M. A. (2002). Affective correlates of trichotillomania. *Behaviour Research and Therapy, 40*(11), 1305-1315. doi:10.1016/S0005-7967(02)00006-2

Diefenbach, G. J., Reitman, D., & Williamson, D. A. (2000). Trichotillomania. A challenge to research and practice. *Clinical Psychology Review, 20*(3), 289-309. doi:10.1016/S0272-7358(98)00083-X

Diefenbach, G. J., Tolin, D. F., Crocetto, J., Maltby, N., & Hannan, S. (2005). Assessment of trichotillomania: A psychometric evaluation of hair-pulling scales. *Journal of Psychopathology and Behavioral Assessment, 27*(3), 169-178. doi:10.1007/s10862-005-0633-7

Diefenbach, G. J., Tolin, D. F., Hannan, S., Crocetto, J., & Worhunsky, P. (2005). Trichotillomania: Impact on psychosocial functioning and quality of life. *Behaviour Research and Therapy, 43*(7), 869-884. doi:10.1016/j.brat.2004.06.010

Diefenbach, G. J., Tolin, D. F., Hannan, S., Maltby, N., & Crocetto, J. (2006). Group treatment for trichotillomania: Behavior therapy versus supportive therapy. *Behavior Therapy, 37*(4), 353-363. doi:10.1016/j.beth.2006.01.006

Diefenbach, G. J., Tolin, D. F., Meunier, S., & Worhunsky, P. (2008). Emotion regulation and trichotillomania: A comparison of clinical and nonclinical hair pulling. *Journal of Behavior Therapy and Experimental Psychiatry, 39*(1), 32-41. doi:10.1016/j.jbtep.2006.09.002

Doron, G., Kyrios, M., & Moulding, R. (2007). Sensitive domains of self-concept in obsessive-compulsive disorder (OCD): Further evidence for a multidimensional model of OCD. *Journal of Anxiety Disorders, 21*, 433-444. doi:10.1016/j.janxdis.2006.05.008

Dubose, J. A. & Spirrison, C. L. (2006). Hair pulling in a diverse college sample. *North American Journal of Psychology, 8*(3), 471-478.

Dufour, B. D. & Garner, J. P. (2010). An ethological analysis of barbering behavior. In A. V. Kalueff, J. L. La Porte, & C. L. Bergner (Eds.), *Neurobiology of grooming behaviour* (pp. 184-225). Cambridge: Cambridge University Press.

Duke, D. C., Bodzin, D. K., Tavares, P., Geffken, G. R., & Storch, E. A. (2009). The phenomenology of hairpulling in a community sample. *Journal of Anxiety Disorders, 23*(8), 1118-1125. doi:10.1016/j.janxdis.2009.07.015

Duke, D. C., Keeley, M. L., Geffken, G. R., & Storch, E. A. (2010). Trichotillomania: A current review. *Clinical Psychology Review, 30*(2), 181-193. doi:10.1016/j.cpr.2009.10.008

Duke, D. C., Keeley, M. L., Ricketts, E. J., Geffken, G. R., & Storch, E. A. (2010). The phenomenology of hairpulling in college students. *Journal of Psychopathology and Behavioral Assessment, 32*(2), 281-292. doi:10.1007/s10862-009-9150-4

du Toit, P. L., van Kradenburg, J., Niehaus, D. J., & Stein, D. J. (2001). Characteristics and phenomenology of hair-pulling: an exploration of subtypes. *Comprehensive Psychiatry, 42*(3), 247-256. doi:10.1053/comp.2001.23134

Eddy, C. M., Rizzo, R., & Cavanna, A. E. (2009). Neuropsychological aspects of Tourette syndrome: A review. *Journal of Psychosomatic Research, 67,* 503-513. doi:10.1016/j.jpsychores.2009.08.001

Egan, S. J., Wade, T. D., & Shafran, R. (2011). Perfectionism as a transdiagnostic process: A clinical review. *Clinical Psychology Review, 31*, 203-212. doi:10.1016/j.cpr.2010.04.009

Eisen, J. L., Phillips, K. A., Baer, L., Beer, D. A., Atala, K. D., & Rasmussen, S. A. (1998). The Brown assessment of beliefs scale: Reliability and validity. *American Journal of Psychiatry, 155*, 102-108.

Elliott, A. J., & Fuqua, R. W. (2000). Trichotillomania: Conceptualization, measurement, and treatment. *Behavior Therapy, 31*(3), 529-545.

Ellis, A. (1962). *Reason and emotion in psychotherapy.* Secaucus, NJ: Lyle Stuart.

Evenden, J. L. (1999). Varieties of impulsivity. *Psychopharmacology, 146*, 348-361.

Falkenstein, M. J., Rogers, K., Malloy, E. J., & Haaga, D. A. F. (2014). Predictors of relapse following treatment of trichotillomania. *Journal of Obsessive-Compulsive and Related Disorders, 3*(4), 345-353. doi:10.1016/j.jocrd.2014.09.001

Falkenstein, M. J., Ruben, L. F., & Haaga, D. A. F. (April, 2015). *ComB (Comprehensive behavioral) model of therapy for trichotillomania: A treatment development study*. Poster presented at the 22nd annual Trichotillomania Learning Centre conference, Arlington, VA.

Felling, R. J. & Singer, H. S. (2011). Neurobiology of Tourette syndrome: Current status and need for further investigation. *The Journal of Neuroscience, 31*(35), 12387-12395. doi: 10.1523/JNEUROSCI.0150-11.2011

Ferrão, Y. A., Almeida, V. P., Bedin, N. R., Rosa, R., & D'Arrigo Busnello, E. (2006). Impulsivity and compulsivity in patients with trichotillomania or skin picking compared with patients with obsessive-compulsive disorder. *Comprehensive Psychiatry, 47*(4), 282-288. doi:10.1016/j.comppsych.2005.11.005

Ferrão, Y. A., Miguel, E., & Stein, D. J. (2009). Tourette's syndrome, trichotillomania, and obsessive-compulsive disorder: How closely are they related? *Psychiatry Research, 170*(1), 32-42. doi:10.1016/j.psychres.2008.06.008

Ferrão, Y. A., Shavitt, R. G., Prado, H., Fontenelle, L. F., Malavazzi, D. M., de Mathis, M. A., Hounie, A. G., … do Rosário, M. C. (2012). Sensory phenomena associated with repetitive behaviors in obsessive-compulsive disorder: An

exploratory study of 1001 patients. *Psychiatry Research, 197*, 253-258. doi:10.1016/j.psychres.2011.09.017

Feusner, J. D., Hembacher, E., & Phillips, K. A. (2009). The mouse who couldn't stop washing: Pathologic grooming in animals and humans. *CNS Spectrums, 14*(9), 503-513.

Field, A. (2009). *Discovering statistics using SPSS* (3rd ed). London: Sage Publications.

Fine, K. M., Walther, M. R., Joseph, J. M., Robinson, J., Ricketts, E. J., Bowe, W. E., & Woods, D. W. (2012). Acceptance-enhanced behavior therapy for trichotillomania in adolescents. *Cognitive and Behavioral Practice, 19*(3), 463-471. doi:10.1016/j.cbpra.2011.10.002

Fineberg, N. A., Chamberlain, S. R., Goudriaan, A. E., Stein, D. J., Vanderschuren, L., J. M. J., Gillan, C. M., … Potenza, M. N. (2014). New developments in human neurocognition: Clinical, genetic, and brain imaging correlates of impulsivity and compulsivity. *CNS Spectrums, 19*, 69-89. doi:10.1017/S1092852913000801

Fineberg, N. A., Potenza, M. N., Chamberlain, S. R., Berlin, H. A., Menzies, L., Bechara, A., . . . Hollander, E. (2010). Probing compulsive and impulsive behaviors, from animal models to endophenotypes: A narrative review. *Neuropsychopharmacology, 35*(3), 591-604. doi:10.1038/npp.2009.185

Flessner, C. A., Conelea, C. A., Woods, D. W., Franklin, M. E., Keuthen, N. J., & Cashin, S. E. (2008). Styles of pulling in trichotillomania: Exploring differences in symptom severity, phenomenology, and functional impact. *Behaviour Research and Therapy, 46*(3), 345-357. doi:10.1016/j.brat.2007.12.009

Flessner, C. A., Knopik, V. S., & McGeary, J. (2012). Hair pulling disorder (trichotillomania): Genes, neurobiology, and a model for understanding

impulsivity and compulsivity. *Psychiatry Research, 199*(3), 151-158. doi:10.1016/j.psychres.2012.03.039

Flessner, C. A., Lochner, C., Stein, D. J., Woods, D. W., Franklin, M. E., & Keuthen, N. J. (2010). Age of onset of trichotillomania symptoms: Investigating clinical correlates. *Journal of Nervous and Mental Disease, 198*(12), 896-900. doi:10.1097/NMD.0b013e3181fe7423

Flessner, C. A., Penzel, F., Trichotillomania Learning Center Scientific Advisory Boards, & Keuthen, N. J. (2010). Current treatment practices for children and adults with trichotillomania: Consensus among experts. *Cognitive and Behavioral Practice, 17*, 290-300. doi:10.1016/j.cbpra.2009.10.006

Flessner, C. A., Woods, D. W., Franklin, M. E., Cashin, S. E., Keuthen, N. J., Mansueto, C. S., . . . Wright, H. H. (2008). The Milwaukee inventory for subtypes of trichotillomania-adult version (MIST-A): Development of an instrument for the assessment of "focused" and "automatic" hair pulling. *Journal of Psychopathology and Behavioral Assessment, 30*(1), 20-30. doi:10.1007/s10862-007-9073-x

Flessner, C. A., Woods, D. W., Franklin, M. E., Keuthen, N. J., & Piacentini, J. (2009). Cross-sectional study of women with trichotillomania: A preliminary examination of pulling styles, severity, phenomenology, and functional impact. *Child Psychiatry and Human Development, 40*(1), 153-167. doi:10.1007/s10578-008-0118-5

Foa, E. B., Huppert, J. D., Leiberg, S., Langer, R., Kichic, R., Hajcak, G., & Salkovskis, P. M. (2002). The obsessive-compulsive inventory: Development and validation of a short version. *Psychological Assessment, 14*(4), 485-496. doi:10.1037//1040-3590.14.4.485

Francazio, S. K. & Flessner, C. A. (2015). Cognitive flexibility differentiates young adults exhibiitng obsessive-compulsive behaviours from controls. *Psychiatry Research, 15*, 185-190. doi:10.1016/j.psychres.2015.04.038

Franklin, M. E., Flessner, C. A., Woods, D. W., Keuthen, N. J., Piacentini, J. C., Moore, P., . . . Wilson, M. A. (2008). The child and adolescent trichotillomania impact project: Descriptive psychopathology, comorbidity, functional impairment, and treatment utilization. *Journal of Developmental and Behavioral Pediatrics, 29*(6), 493-500. doi:10.1097/DBP.0b013e31818d4328

Franklin, M. E., & Tolin, D. F. (2007). *Treating trichotillomania: Cognitive-behavioral therapy for hairpulling and related problems*. Dordrecht: Springer.

Franklin, M. E., Tolin, D. F., & Diefenbach, G. J. (2006). Trichotillomania. In E. Hollander & D. J. Stein (Eds.), *Handbook of impulse control disorders* (pp.149-173). Washington, DC: American Psychiatric Press.

Franklin, M. E., Zagrabbe, K., & Benavides, K. L. (2011). Trichotillomania and its treatment: A review and recommendations. *Expert Review of Neurotherapeutics, 11*(8), 1165-1174. doi:10.1586/ern.11.93

Frazier, S. N. & Vela, J. (2014). Dialectical behavior therapy for the treatment of anger and aggressive behavior: A review. *Aggression and Violent Behavior, 19,* 156-163. doi:10.1016/j.avb.2014.02.001

Frey, A. S., McKee, M., King, R. A., & Martin, A. (2005). Hair apparent: Rapunzel syndrome. *American Journal of Psychiatry, 162*(2), 242-248. doi:10.1176/appi.ajp.162.2.242

Frost, R. O., Marten, P., Lahart, C., & Rosenblate, R. (1990). The dimensions of perfectionism. *Cognitive Therapy and Research, 14*(5), 449-468. doi:10.1007/BF01172967

Frost, R. O. & Steketee, G. (Eds.) (2002). *Cognitive approaches to obsessions and compulsions: Theory, assessment, and treatment.* Amsterdam: Pergamon.

Galski, T. (1983). Hair pulling (trichotillomania). *Psychoanalytic review, 70*(3), 331-346.

García-Soriano, G., Clark, D. A., Belloch, A., & del Palacio, A. (2012). Self-worth contingencies and obsessionality: A promising approach to vulnerability? *Journal of Obsessive-Compulsive and Related Disorders, 1*, 196-202. doi:10.1016/j.jocrd.2012.05.003

Garner, J. P., Thogerson, C. M., Dufour, B. D., Würbel, H., Murray, J. D., & Mench, J. A. (2011). Reverse-translational biomarker validation of abnormal repetitive behaviors in mice: An illustration of the 4P's modeling approach. *Behavioural Brain Research, 219*(2), 189-196. doi:10.1016/j.bbr.2011.01.002

Garner, J. P., Thogerson, C. M., Würbel, H., Murray, J. D., & Mench, J. A. (2006). Animal neuropsychology: Validation of the intra-dimensional extra-dimensional set shifting task for mice. *Behavioural Brain Research, 173*(1), 53-61. doi:10.1016/j.bbr.2006.06.002

Garner, J. P., Weisker, S. M., Dufour, B., & Mench, J. A. (2004). Barbering (fur and whisker trimming) by laboratory mice as a model of human trichotillomania and obsessive-compulsive spectrum disorders. *Comparative Medicine, 54*(2), 216-224.

Gershuny, B. S., Keuthen, N. J., Gentes, E. L., Russo, A. R., Emmott, E. C., Jameson, M., . . . Jenike, M. A. (2006). Current posttraumatic stress disorder and history of trauma in trichotillomania. *Journal of Clinical Psychology, 62*(12), 1521-1529. doi:10.1002/jclp.20303

Ghisi, M., Bottesi, G., Sica, C., Ouimet, A. J., & Sanavio, E. (2013). Prevalence, phenomenology and diagnostic criteria of hair-pulling in an Italian non-clinical sample: A preliminary study. *Journal of Obsessive-Compulsive and Related Disorders, 2*(1), 22-29. doi:10.1016/j.jocrd.2012.09.003

Glazier, K., Wetterneck, C., Singh, S., & Williams, M. (2015). Stigma and shame as barriers to treatment for obsessive-compulsive and related disorders. *Journal of Depression and Anxiety, 4*, doi:10.4191/2167-1044.1000191

Gluhoski, V. L. (1995). A cognitive approach for treating trichotillomania. *Journal of Psychotherapy Practice and Research, 4*(4), 277-285.

Graber, J., & Arndt, W. B. (1993). Trichotillomania. *Comprehensive Psychiatry, 34*(5), 340-346. doi:10.1016/0010-440X(93)90021-U

Grachev, I. D. (1997). MRI-based morphometric topographic parcellation of human neocortex in trichotillomania. *Psychiatry and Clinical Neurosciences, 51*(5), 315-321.

Grant, J. E. (April, 2015). *Trichotillomania and skin picking: Precision medicine initative.* Keynote address to the 22nd annual Trichotillomania Learning Centre conference, Arlington, VA.

Grant, J. E. & Chamberlain, S. R. (2015). Trichotillomania and skin picking disorder: Different kinds of OCD. *Focus: The Journal of Lifelong Learning in Psychiatry, 13*(2), 184-189. doi:10.1176/appi.focus.130212

Grant, J. E., Leppink, E., & Chamberlain, S. (2015). Body focused repetitive behavior disorders and perceived stress: Clinical and cognitive associations. *Journal of Obsessive-Compulsive and Related Disorders, 5*, 82-86. doi:10.1016/j.jocrd.2015.02.001

Grant, J. E., & Odlaug, B. L. (2008). Clinical characteristics of trichotillomania with trichophagia. *Comprehensive Psychiatry, 49*(6), 579-584. doi:10.1016/j.comppsych.2008.05.002

Grant, J. E., Odlaug, B. L., & Chamberlain, S. R. (2011). A cognitive comparison of pathological skin picking and trichotillomania. *Journal of Psychiatric Research, 45*(12), 1634-1638. doi:10.1016/j.jpsychires.2011.07.012

Grant, J. E., Odlaug, B. L., & Potenza, M. N. (2007). Addicted to hair pulling? How an alternate model of trichotillomania may improve treatment outcome. *Harvard Review of Psychiatry, 15*(2), 80-85. doi:10.1080/10673220701298407

Grant, J. E., & Stein, D. J. (2014). Body-focused repetitive behavior disorders in ICD-11. *Revista Brasileira de Psiquiatria, 36*, S59-S64. doi:10.1590/1516-4446-2013-1228

Gratz, K. L. & Roemer, L. (2004). Multidimensional assessment of emotion regulation and dysregulation: Development, factor structure, and initial validation of the difficulties in emotion regulation scale. *Journal of Psychopathology and Behavioral Assessment, 26*(1), 41-54. doi:10.1023/B:JOBA.0000007455.08539.94

Greenberg, H. R. (1969). Transactions of a hair-pulling symbiosis. *The Psychiatric Quarterly, 43*(1-4), 662-674. doi:10.1007/BF01564278

Greenberg, H. R., & Sarner, C. A. (1965). Trichotillomania: Symptom and syndrome. *Archives of General Psychiatry, 12*, 482-489.

Greer, J. M., & Capecchi, M. R. (2002). Hoxb8 is required for normal grooming behavior in mice. *Neuron, 33*(1), 23-34. doi:10.1016/S0896-6273(01)00564-5

Gross, J. J. (1998). The emerging field of emotion regulation: An integrative review. *Review of General Psychology, 2*(3), 271-299. doi:10.1177/1754073910380974

Gross, J. J. (2002). Emotion regulation: Affective, cognitive, and social consequences. *Psychophysiology, 39*, 281-291. doi:10.1017.S0048577201393198

Guidano, V., & Liotti, G. (1983). *Cognitive processes and emotional disorders*. New York: The Guildford Press.

Guion, R. (1980). On trinitarian doctrines of validity. *Professional Psychology, 11*(3), 385-398.

Guy, W. (1976). Clinical global impressions scale. In W. Guy (Ed.), *ECDEU assessment manual for psychopharmacology* (US Department of Health, Education, and Welfare Publication No. ADM 76-338) (pp. 218-222). Rockville, MD: National Institute of Mental Health.

Hagh-Shenas, H., Moradi, A., Dehbozorgi, G., Farashbandi, B., & Alishahian, F. (2004). Trichotillomania-associated personality characteristics. *Iranian Journal of Medical Sciences, 29*(3), 105-108.

Hajcak, G., Franklin, M. E., Simons, R. F., & Keuthen, N. J. (2006). Hairpulling and skin picking in relation to affective distress and obsessive-compulsive symptoms. *Journal of Psychopathology and Behavioral Assessment, 28*(3), 179-187. doi:10.1007/s10862-005-9001-x

Harvey, A. G., Watkins, E., Mansell, W., & Shafran, R. (2004). *Cognitive behavioural processes across psychological disorders: A transdiagnostic approach to research and treatment*. Oxford: Oxford University Press.

Hawton, K., Salkovskis, P. M., Kirk, J., & Clark, D. M. (1989). The development and principles of cognitive-behavioural treatments. In K. Hawton, P. M. Salkovskis, J. Kirk & D. M. Clark (Eds.), *Cognitive behaviour therapy for psychiatric problems: A practical guide* (pp. 1-12). Oxford: Oxford University Press.

Hayes, S. C., Luoma, J. B., Bond, F. W., Masuda, A., & Lillis, J. (2001). Acceptance and commitment therapy: Model, processes and outcomes. *Behaviour Research and Therapy, 44*, 1-25. doi:10.1016/j.brat.2005.06.006

Hayes, S. C., Strosahl, K. D., & Wilson, K. G. (2003). *Acceptance and commitment therapy: An experiential approach to behavior change*. New York: The Guilford Press.

Hayes, S. C., Strosahl, H. D., Wilson, K. G., Bissett, R. T., Pistorello, J., Toarmino, D., … McCurry, S. M. (2004). Measuring experiential avoidance: A preliminary test of a working model. *The Psychological Record, 54*, 553-578.

Hayes, S. C., Wilson, K. G., Gifford, E. V., Follette, V. M., & Strosahl, K. (1996). Experiential avoidance and behavioral disorders: A functional dimensional approach to diagnosis and treatment *Journal of Consulting and Clinical Psychology, 64*(6), 1152-1168.

Hemmings, S. M. J., Kinnear, C. J., Lochner, C., Seedat, S., Corfield, V. A., Moolman-Smook, J. C., & Stein, D. J. (2006). Genetic correlates in trichotillomania - A case-control association study in the South African Caucasian population. *Israel Journal of Psychiatry and Related Sciences, 43*(2), 93-101.

Henry, J. D. & Crawford, J. R. (2005). The short-form version of the depression anxiety stress scale (DASS-21): Construct validity and normative data in a large non-clinical sample. *British Journal of Clinical Psychology, 44*, 227-239. doi:10.1348/014466505X29657

Hersperger, C. H. (2012). *An examination of quality of life in women with compulsive hair pulling*. (Doctoral dissertation). Rutgers, The State University of New Jersey, New Jersey. Retrieved from https://rucore.libraries.rutgers.edu/rutgers-lib/39084/

Hervey, A. S., Epstein, J. N., & Curry, J. F. (2004). Neuropsychology of adults with attention-deficit/hyperactivity disorder: A meta-analytic review. *Neuropsychology, 18*(3), 485-503. doi: 10.1037/0894- 4105.18.3.485.supp.

Hilton, S., Hunt, K., Emslie, C., Salinas, M., & Ziebland, S. (2008). Have men been overlooked? A comparison of young men and women's experiences of chemotherapy-induced alopecia. *Psycho-Oncology, 17*, 577-583. doi:10.1002/pon.1272

Himle, M. B., Flessner, C. A., & Woods, D. W. (2004). Advances in the behavior analytic treatment of trichotillomania and Tourette's syndrome. *Journal of Early and Intensive Behavior Intervention, 1*(1),57-64. doi:10.1037/h0100282

Hollander, E. (1993). Obsessive-compulsive spectrum disorders: An overview. *Psychiatric Annals, 23*(7), 355-358.

Hollander, E., Baker, B. R., Kahn, J., & Stein, D. J. (2006). Conceptualizing and assessing impulse-control disorders. In G. O. Gabbard & D. J. Stein (Eds.), *Clinical manual of impulse-control disorders* (pp. 1-18). Arlington, VA: American Psychiatric Publishing.

Hollander, E. & Wong, C. M. (1995). Introduction: Obsessive-compulsive spectrum disorders. *Journal of Clinical Psychiatry, 56*, 3-6.

Horn, J. L. (1965). A rationale and test for the number of factors in factor analysis. *Psychometrika, 30,* 179-185.

Houghton, D. C., Compton, S. N., Twohig, M. P., Saunders, S. M., Franklin, M. E., Neal-Barnett, A. M., . . . Woods, D. W. (2014). Measuring the role of psychological inflexibility in trichotillomania. *Psychiatry Research, 220*(1-2), 356-361. doi:10.1016/j.psychres.2014.08.003

Hu, L. & Bentler, P. M. (1998). Fit indices in covariance structure modeling: Sensitivty to underparameterized model misspecification. *Psychological Methods, 3*(4), 424-453.

Hunt, N., & McHale, S. (2005). The psychological impact of alopecia. *BMJ (Online), 331*, 951-953. doi:10.1136/bmj.331.7522.951

Hunt, N., & McHale, S. (June, 2007). The psychological impact of alopecia. *The Psychologist, 20*(6), 362-364. Retrieved from https://thepsychologist.bps.org.uk/

Hussain, S. H. (1992). Trichotillomania - Two case reports from a similar cultural background. *Psychopathology, 25*(6), 289-293.

Irwin, H. J. (1998). Affective predictors of dissociation II: Shame and guilt. *Journal of Clinical Psychology, 54*, 237-245. doi:10.1002/(SICI)1097-4679(199802)54:23.3.CO;2-U

Iwata, B. A., Dorsey, M. F., Slifer, K. J., Bauman, K. E., & Richman, G. S. (1994). Toward a functional analysis of self-injury. *Journal of Applied Behavior Analysis, 27*(2), 197-209.

Jackson, S. R., Parkinson, A., Kim, S. Y., Schüermann, M., & Eickhoff, S. B. (2011). On the functional anatomy of the urge-for-action. *Cognitive Neuroscience, 2*(3-4), 227-257. doi:10.1080/17588928.2011.604717

Jefferys, D. (1995). Trichotillomania: A common hidden disorder. *Australian Family Physician, 24*(7), 1224-1228.

Johansson, A., Grant, J. E., Kim, S. W., Odlaug, B. L., & Götestam, K. G. (2009). Risk factors for problematic gambling: A critical literature review. *Journal of Gambling Studies, 25*, 67-92. doi:10.1007/s10899-008-9088-6

Johnson, J. & El-Alfy, A. T. (2015). Review of available studies of the neurobiology and pharmacotherapeutic management of trichotillomania. Advance online

publication. *Journal of Advanced Research.* doi:http://dx.doi.org/10.1016/j.jare.2015.05.001

Keijsers, G. P. J., Van Minnen, A., Hoogduin, C. A. L., Klaassen, B. N. W., Hendriks, M. J., & Tanis-Jacobs, J. (2006). Behavioural treatment of trichotillomania: Two-year follow-up results. *Behaviour Research and Therapy, 44*(3), 359-370. doi: 10.1016/j.brat.2005.03.004

Kaplan, R. A., Enticott, P. G., Hohwy, J., Castle, D. J., & Rossell, S. L. (2014). Is body dysmorphic disorder associated with abnormal bodily self-awareness? A study using the rubber hand illusion. *PLoS ONE, 9*(6), doi:10.1371/journal.pone.0099981

Keuthen, N. J., Altenburger, E. M., & Pauls, D. (2014). A family study of trichotillomania and chronic hair pulling. *American Journal of Medical Genetics, Part B: Neuropsychiatric Genetics, 165*(2), 167-174.

Keuthen, N. J., Fama, J., Altenburger, E. M., Allen, A., & Pauls, D. (2013). Family environment in adolescent trichotillomania. *Journal of Obsessive-Compulsive and Related Disorders, 2*(4), 366-374.

Keuthen, N. J., Flessner, C. A., Woods, D. W., Franklin, M. E., Stein, D. J., & Cashin, S. E. (2007). Factor analysis of the Massachusetts General Hospital hairpulling scale. *Journal of Psychosomatic Research, 62*(6), 707-709. doi:10.1016/j.jpsychores.2006.12.003

Keuthen, N. J., Fraim, C., Deckersbach, T., Dougherty, D. D., Baer, L., & Jenike, M. A. (2000). Longitudinal follow-up of naturalistic treatment outcome in patients with trichotillomania. *Journal of Clinical Psychiatry, 62*(2), 101-107.

Keuthen, N. J., Makris, N., Schlerf, J. E., Martis, B., Savage, C. R., McMullin, K., Seidman, L. J., … Rauch, S. L. (2007). Evidence for reduced cerebellar volumes

in trichotillomania. *Biological Psychiatry, 61*, 374-381. doi:10.1016/j.biopsych.2006.06.013

Keuthen, N. J., O'Sullivan, R. L., Hayday, C. F., Peets, K. E., Jenike, M. A., & Baer, L. (1997). The relationship of menstrual cycle and pregnancy to compulsive hairpulling. *Psychotherapy and Psychosomatics, 66*(1), 33-37.

Keuthen, N. J., O'Sullivan, R. L., Ricciardi, J. N., Shera, D., Savage, C. R., Borgmann, A. S., . . . Baer, L. (1995). The Massachusetts General Hospital (MGH) hairpulling scale: I. Development and factor analyses. *Psychotherapy and Psychosomatics, 64*(3-4), 141-145.

Keuthen, N. J., Rothbaum, B. O., Falkenstein, M. J., Meunier, S., Timpano, K. R., Jenike, M. A., & Welch, S. S. (2011). DBT-enhanced habit reversal treatment for trichotillomania: 3- and 6-month follow-up results. *Depression and Anxiety, 28*(4), 310-313. doi:10.1002/da.20778

Keuthen, N. J., Rothbaum, B. O., Fama, J., Altenburger, E., Falkenstein, M. J., Sprich, S. E. … Welch, S. S. (2012). DBT-enhanced cognitive-behavioral treatment for trichotillomania: A randomized controlled trial. *Journal of Behavioural Addictions, 1*(3), 106-114. doi: 10.1556/JBA.1.2012.003

Keuthen, N. J., Rothbaum, B. O., Welch, S. S., Taylor, C., Falkenstein, M., Heekin, M., . . . Jenike, M. A. (2010). Pilot trial of dialectical behavior therapy-enhanced habit reversal for trichotillomania. *Depression and Anxiety, 27*(10), 953-959. doi:10.1002/da.20732

Keuthen, N. J., Savage, C. R., O'Sullivan, R. L., Brown, H. D., Shera, D. M., Cyr, P., . . . Baer, L. (1996). Neuropsychological functioning in trichotillomania. *Biological Psychiatry, 39*(8), 747-749. doi:10.1016/0006-3223(95)00613-3

Keuthen, N. J., Tung, E. S., Altenburger, E. M., Blais, M .A., Pauls, D. L., & Flessner, C. A. (2015). Trichotillomania and personality traits from the five-factor model. *Revista Brasileira de Psiquiatria*. Advance online publication. doi:10.1590/1516-4446-2015-1657

King, R. A., Scahill, L., Vitulano, L. A., Schwab-Stone, M., Tercyak Jr, K. P., & Riddle, M. A. (1995). Childhood trichotillomania: Clinical phenomenology, comorbidity, and family genetics. *Journal of the American Academy of Child and Adolescent Psychiatry, 34*(11), 1451-1459.

King, R. A., Zohar, A. H., Ratzoni, G., Binder, M., Kron, S., Dycian, A., . . . Apter, A. (1995). An epidemiological study of trichotillomania in Israeli adolescents *Journal of the American Academy of Child and Adolescent Psychiatry, 34*(9), 1212-1215. doi:10.1097/00004583-199509000-00019

Kirk, R. E. (1996). Practical significance: A concept whose time has come. *Educational and Psychological Measurement, 56*(5), 746-759. doi:10.1177/0013164496056005002

Krishnan, K. R. R., Davidson, J. R. T., & Guajardo, C. (1985). Trichotillomania - A review. *Comprehensive Psychiatry, 26*(2), 123-128. doi:10.1016/0010-440X(85)90032-X

Larson, C. M. (2007). *Construction and validation of a self-report measure of trichotillomania distress: The hairpulling distress and impairment scale (HDIS).* (Doctoral dissertation), University of Toledo, Ohio. Retrieved from http://utdr.utoledo.edu/theses-dissertations/ (1297)

Lazarus, R. S. (1982). Thoughts on the relations between emotion and cognition. *American Psychologist, 37*(9), 1019-1024.

Lee, J. A., Kim, C. K., Jahng, G. H., Hwang, L. K., Cho, Y. W., Kim, Y. J., . . . Bahn, G. H. (2010). A pilot study of brain activation in children with trichotillomania during a visual-tactile symptom provocation task: A functional magnetic resonance imaging study. *Progress in Neuro-Psychopharmacology and Biological Psychiatry, 34*(7), 1250-1258. doi:10.1016/j.pnpbp.2010.06.031

Lenane, M. C., Swedo, S. E., Rapoport, J. L., Leonard, H., Sceery, W., & Guroff, J. J. (1992). Rates of obsessive compulsive disorder in first degree relatives of patients with trichotillomania: A research note. *Journal of Child Psychology and Psychiatry and Allied Disciplines, 33*(5), 925-933. doi:10.1111/j.1469-7610.1992.tb01966.x

Lenz, A. S., Taylor, R., Fleming, M., & Serman, N. (2014). Effectiveness of dialectical behavior therapy for treating eating disorders. *Journal of Counseling and Development, 92*, 26-35. doi:10.1002/j.1556-6676.2014.00127.x

Leopold, R. & Backenstrass, M. (2015). Neuropsychological differences between obsessive-compulsive washers and checkers: A systematic review and meta-analysis. *Journal of Anxiety Disorders, 30*, 48-58. doi:10.1016/j.janxdis.2014.12.016

Lerner, J., Franklin, M. E., Meadows, E. A., Hembree, E., & Foa, E. B. (1998). Effectiveness of a cognitive behavioral treatment program for trichotillomania: An uncontrolled evaluation. *Behavior Therapy, 29*(1), 157-171. doi:10.1016/S0005-7894(98)80036-1

Lewis, H. B. (1971). *Shame and guilt in neurosis*. New York: International Universities Press.

Lewis, J. R. (2013). Hair-pulling, culture, and unmourned death. *International Journal of Psychoanalytic Self Psychology, 8*(2), 202-217. doi:10.1080/15551024.2013.768749

Lewis, M. (1995). *Shame: The exposed self.* New York, NY: The Free Press.

Linehan, M. (1993a). *Cognitive-behavioral treatment of borderline personality disorder.* New York: The Guilford Press.

Linehan, M. (1993b). *Skills training manual for treating borderline personality disorder.* New York: The Guilford Press.

Lochner, C., du Toit, P. L., Zungu-Dirwayi, N., Marais, A., Van Kradenburg, J., Seedat, S., . . . Stein, D. J. (2002). Childhood trauma in obsessive-compulsive disorder, trichotillomania, and controls. *Depression and Anxiety, 15*(2), 66-68. doi:10.1002/da.10028

Lochner, C., Grant, J. E., Odlaug, B. L., Woods, D. W., Keuthen, N. J., & Stein, D. J. (2012). DSM-5 field survey: Hair-pulling disorder (trichotillomania). *Depression and Anxiety, 29*(12), 1025-1031. doi:10.1002/da.22011

Lochner, C., Hemmings, S. M. J., Kinnear, C. J., Niehaus, D. J. H., Nel, D. G., Corfield, V. A., . . . Stein, D. J. (2005). Cluster analysis of obsessive-compulsive spectrum disorders in patients with obsessive-compulsive disorder: Clinical and genetic correlates. *Comprehensive Psychiatry, 46*(1), 14-19. doi:10.1016/j.comppsych.2004.07.020

Lochner, C., Seedat, S., du Toit, P. L., Nel, D. G., Niehaus, D. J. H., Sandler, R., & Stein, D. J. (2005). Obsessive-compulsive disorder and trichotillomania: A phenomenological comparison. *BMC Psychiatry, 5*. doi:10.1186/1471-244X-5-2

Lochner, C., Seedat, S., Hemmings, S. M. J., Kinnear, C. J., Corfield, V. A., Niehaus, D. J. H., . . . Stein, D. J. (2004). Dissociative experiences in obsessive-

compulsive disorder and trichotillomania: Clinical and genetic findings. *Comprehensive Psychiatry, 45*(5), 384-391. doi:10.1016/j.comppsych.2004.03.010

Lochner, C., Seedat, S., & Stein, D. J. (2010). Chronic hair-pulling: Phenomenology-based subtypes. *Journal of Anxiety Disorders, 24*(2), 196-202. doi:10.1016/j.janxdis.2009.10.008

Lochner, C., Simeon, D., Niehaus, D. J. H., & Stein, D. J. (2002). Trichotillomania and skin-picking: A phenomenological comparison. *Depression and Anxiety, 15*(2), 83-86. doi:10.1002/da.10034

Lochner, C., Stein, D. J., Woods, D., Pauls, D. L., Franklin, M. E., Loerke, E. H., & Keuthen, N. J. (2011). The validity of DSM-IV-TR criteria B and C of hair-pulling disorder (trichotillomania): Evidence from a clinical study. *Psychiatry Research, 189*(2), 276-280. doi:10.1016/j.psychres.2011.07.022

Lovibond, S. H. & Lovibond, P. F. (1995). *Manual for the depression anxiety stress scales* (2nd ed.). Sydney: Psychology Foundation.

Mansueto, C. S., Golomb, R. G., Thomas, A. M., & Stemberger, R. M. (1999). A comprehensive model for behavioral treatment of trichotillomania. *Cognitive and Behavioral Practice, 6*(1), 23-43. doi:10.1016/S1077-7229(99)80038-8

Mansueto, C. S., Stemberger, R. M., Thomas, A., & Golomb, R. (1997). Trichotillomania: A comprehensive behavioral model. *Clinical Psychology Review, 17*(5), 567-577. doi:10.1016/S0272-7358(97)00028-7

Marcks, B. A., Wetterneck, C. T., & Woods, D. W. (2006). Investigating healthcare providers' knowledge of trichotillomania and its treatment. *Cognitive Behaviour Therapy, 35*(1), 19-27. doi:10.1080/16506070510010657

Marcks, B. A., Woods, D. W., & Ridosko, J. L. (2005). The effects of trichotillomania disclosure on peer perceptions and social acceptability. *Body Image, 2*(3), 299-306. doi:10.1016/j.bodyim.2005.05.003

Martin, A., Pigott, T. A., Lalonde, F. M., Dalton, I., Dubbert, B., & Murphy, D. L. (1993). Lack of evidence for Huntington's disease-like cognitive dysfunction in obsessive-compulsive disorder. *Biological Psychiatry, 33*(5), 345-353. doi:10.1016/0006-3223(93)90323-6

McCarley, N. G., Spirrison, C. L., & Ceminsky, J. L. (2002). Hair pulling behavior reported by African American and non-African American college students. *Journal of Psychopathology and Behavioral Assessment, 24*(3), 139-144. doi:10.1023/A:1016099015437

McGarvey, E. L., Baum, L. D., Pinkerton, R. C., & Rogers, L. M. (2001). Psychological sequelae and alopecia among women with cancer. *Cancer Practice, 9*(6), 283-289. doi:10.1111/j.1523-5394.2001.96007.pp.x

McGuire, J. F., Kugler, B. B., Park, J. M., Horng, B., Lewin, A. B., Murphy, T. K., & Storch, E. A. (2012). Evidence-based assessment of compulsive skin picking, chronic tic disorders and trichotillomania in children. *Child Psychiatry and Human Development, 43*(6), 855-883. doi:10.1007/s10578-012-0300-7

McGuire, J. F., Ung, D., Selles, R. R., Rahman, O., Lewin, A. B., Murphy, T. K., & Storch, E. A. (2014). Treating trichotillomania: A meta-analysis of treatment effects and moderators for behavior therapy and serotonin reuptake inhibitors. *Journal of Psychiatric Research, 58*, 76-83.

Meunier, S. A., Tolin, D. F., & Franklin, M. (2009). Affective and sensory correlates of hair pulling in pediatric trichotillomania. *Behavior Modification, 33*(3), 396-404. doi:10.1177/0145445508326260

Miltenberger, R. G., Long, E. S., & Rapp, J. T. (2006). Characteristics of trichotillomania. In D. W. Woods & R. G. Miltenberger (Eds.) *Tic disorders, trichotillomania, and other repetitive behavior disorders: Behavioral approaches to analysis and treatment* (pp. 133-150). New York, NY: Springer.

Miltenberger, R. G., Long, E. S., Rapp, J. T., Lumley, V., & Elliott, A. J. (1998). Evaluating the function of hair pulling: A preliminary investigation. *Behavior Therapy, 29*(2), 211-219. doi:10.1016/S0005-7894(98)80003-8

Moerman, D. E. (1988). The meaning of baldness and implications for treatment. *Clinics in Dermatology, 6*(4), 89-92. doi:10.1016/0738-081X(88)90071-5

Monroe, J. T., & Abse, D. W. (1963). The psychopathology of trichotillomania and trichophagy. *Psychiatry, 26*, 95-103.

Moon-Fanelli, A. A., Dodman, N. H., & O'Sullivan, R. L. (1999). Veterinary models of compulsive self-grooming: Parallels with trichotillomania. In D. J. Stein, G. A. Christenson, & E. Hollander (Eds.), *Trichotillomania* (pp. 63-92). Washington, DC: American Psychiatric Press.

Moore, P. S., Franklin, M. E., Keuthen, N. J., Flessner, C. A., Woods, D. W., Piacentini, J. A., . . . Trichotillomania Learning Center Scientific Advisory Board. (2009). Family functioning in pediatric trichotillomania. *Child and Family Behavior Therapy, 31*(4), 255-269. doi:10.1080/07317100903311000

Morand-Beaulieu, S., O'Connoer, K. P., Richard, M., Sauvé, G., Leclerc, J. B., Blanchet, P. J., & Lavoie, M. E. (2016). The impact of cognitive-behavioral therapy on event-related potentials in patients with tic disorders or body-focused repetitive behaviors. *Frontiers in Psychiatry, 7*, doi:10.3389/fpsyt.2016.00081

Moritz, S., & Rufer, M. (2011). Movement decoupling: A self-help intervention for the treatment of trichotillomania. *Journal of Behavior Therapy and Experimental Psychiatry, 42*(1), 74-80. doi:10.1016/j.jbtep.2010.07.001

Morris, S. H., Zickgraf, H. F., Dingfelder, H. E., & Franklin, M. E. (2013). Habit reversal training in trichotillomania: Guide for the clinician. *Expert Review of Neurotherapeutics, 13*(9), 1069-1077. doi:10.1586/14737175.2013.827477

Moulding, R., Anglim, J., Nedeljkovic, M., Doron, G., Kyrios, M., & Ayalon, A. (2011). The obsessive beliefs questionnaire (OBQ): Examination in nonclinical samples and development of a short version. *Assessment, 18*(3), 357-374. doi:10.1177/1073191110376490

Moulding, R., Doron, G., Kyrios, M., & Nedeljkovic, M. (2008). Desire for control, sense of control and obsessive-compulsive checking: An extension to clinical samples. *Journal of Anxiety Disorders, 22*, 1472-1479. doi:10.1016/j.janxdis.2008.03.001

Moulding, R., Doron, G., Kyrios, M., & Nedeljkovic, M. (2009). Mediated and direct effects of general control beliefs on obsessive compulsive symptoms. *Canadian Journal of Behavioural Science, 41*(2), 84-92. doi:10.1037/a0014840

Moulding, R., & Kyrios, M. (2006). Anxiety disorders and control related beliefs: The exemplar of obsessive-compulsive disorder. *Clinical Psychology Review, 26*, 573-583. doi:10.1016/j.cpr.2006.01.009

Moulding, R., Mancuso, S. G., Rehm, I., & Nedeljkovic, M. (2016). The self in the obsessive compulsive-related disorders: Hoarding disorder, body dysmorphic disorder and trichotillomania. In M. Kyrios, R. Moulding, G. Doron, S. S. Bhar, M. Nedeljkovic, & M. Mikulincer. (Eds.) *The self in understanding and treating psychological disorders.* Cambridge: Cambridge University Press.

Münstedt, K., Manthey, N., Sachsse, S., & Vahrson, H. (1997). Changes in self-concept and body image during alopecia induced cancer chemotherapy. *Supportive Care in Cancer, 5*(2), 139-143. doi:10.1007/BF01262572

Muris, P., Merckelbach, H., & Clavan, M. (1997). Abnormal and normal compulsions. *Behaviour Research and Therapy, 35*(5), 249-252.

Neacsiu, A. D., Eberle, J., Kramer, R., Wiesmann, T., & Linehan, M. M. (2014). Dialectical behavior therapy skills for transdiagnostic emotion dysregulation: A pilot randomized controlled trial. *Behaviour Research and Therapy, 59*, 40-51. doi:10.1016/j.brat.2014.05.005

Neal-Barnett, A., Flessner, C., Franklin, M. E., Woods, D. W., Keuthen, N. J., & Stein, D. J. (2010). Ethnic differences in trichotillomania: Phenomenology, interference, impairment, and treatment efficacy. *Journal of Anxiety Disorders, 24*(6), 553-558. doi:10.1016/j.janxdis.2010.03.014

Neal-Barnett, A., & Stadulis, R. (2006). Affective states and racial identity among African-American women with trichotillomania. *Journal of the National Medical Association, 98*(5), 753-757.

Neal-Barnett, A., Statom, D., & Stadulis, R. (2010). Trichotillomania symptoms in African American women: Are they related to anxiety and culture? *CNS Neuroscience and Therapeutics, 17*(4), 207-213. doi:10.1111/j.1755-5949.2010.00138.x

Neef, N. A. & Iwata, B. A. (1994). Current research on functional analysis methodologies: An introduction. *Journal of Applied Behavior Analysis, 27*(2), 211-214.

Ninan, P. T., Rothbaum, B. O., Marsteller, F. A., Knight, B. T., & Eccard, M. B. (2000). A placebo-controlled trial of cognitive-behaviroal therapy and clomipramine in trichotillomania. *Journal of Clinical Psychiatry, 61*(1), 47-50.

Noble, C. L. (2012). *The relationships among multidimensional perfectionism, shame and trichotillomania symptom severity.* (Doctoral dissertation), Georgia State University, Georgia. Retrieved from http://scholarworks.gsu.edu/cps_diss/78

Norberg, M. M., Wetterneck, C. T., Woods, D. W., & Conelea, C. A. (2007). Experiential avoidance as a mediator of relationships between cognitions and hair-pulling severity. *Behavior Modification, 31*(4), 367-381. doi:10.1177/0145445506297343

Novak, C. E. (2014). Barriers to recovery from trichotillomania, skin picking disorder and related BFRBs. *In Touch, 17*. Retreived from http://www.trich.org/treatment/article-barriers-novak.html

Novak, C. E., Keuthen, N. J., Stewart, S. E., & Pauls, D. L. (2009). A twin concordance study of trichotillomania. *American Journal of Medical Genetics, Part B: Neuropsychiatric Genetics, 150*(7), 944-949. doi:10.1002/ajmg.b.30922

Nunnally, J. C. (1978). *Psychometric theory* (2nd ed.). New York, NY: McGraw-Hill.

Obsessive Compulsive Cognitions Working Group [OCCWG]. (1997). Cognitive assessment of obsessive-compulsive disorder. *Behaviour Research and Therapy, 35*(7), 667-681.

Obsessive Compulsive Cognitions Working Group [OCCWG]. (2001). Development and initial validation of the obsessive beliefs questionnaire and the interpretation of intrusions inventory. *Behaviour Research and Therapy, 39*, 987-1006. doi:10.1016/S0005-7967(00)00085-1

Obsessive Compulsive Cognitions Working Group [OCCWG]. (2005). Psychometric validation of the obsessive belief questionnaire and interpretation of intrusions inventory – Part 2: Factor analyses and testing of a brief version. *Behaviour Research and Therapy, 43*, 1527-1542. doi:10.1016.j.brat.2004.07.010

O'Connor, K. (2002). A cognitive-behavioral/physiological model of tic disorders. *Behaviour Research and Therapy, 40*, 1113-1142. doi:10.1016/S0005-7967(02)00048-7

O'Connor, K., Jean-Sébastien, A., Julien, D., Aardema, F., Laverdure, A., & Lavoie, M. (2015). The style of planning action (STOP) questionnaire in OCD spectrum disorders. *Personality and Individual Differences, 86,* 25-32. doi:10.1016/j.paid.2015.05.018

O'Connor, K., St-Pierre-Delorme, M. È., Leclerc, J., Lavoie, M., & Blais, M. T. (2014). Meta-cognitions in Tourette syndrome, tic disorders, and body-focused repetitive disorder. *Canadian Journal of Psychiatry, 59*(8), 417-425. doi:10.1155/2013/198746.

O'Sullivan, R. L., Keuthen, N. J., Hayday, C. F., Ricciardi, J. N., Buttolph, M. L., Jenike, M. A., & Baer, L. (1995). The Massachusetts General Hospital (MGH) hairpulling scale: 2. Reliability and validity. *Psychotherapy and Psychosomatics, 64*, 146-148.

O'Sullivan, R. L., Mansueto, C. S., Lerner, E. A., & Miguel, E. C. (2000). Characterization of trichotillomania: A phenomenological model with clinical relevance to obsessive-compulsive spectrum disorders. *The Psychiatric Clinics of North America, 23*(3), 587-603.

O'Sullivan, R. L., Rauch, S. L., Breiter, H. C., Grachev, I. D., Baer, L., Kennedy, D. N., Keuthen, N. J., … Jenike, M. A. (1997). Reduced basal ganglia volumes in

trichotillomania measured via morphometric magnetic resonance imaging. *Biological Psychiatry, 42*, 39-45.

Odlaug, B. L., Chamberlain, S. R., Derbyshire, K. L., Leppink, E. W., & Grant, J. E. (2014). Impaired response inhibition and excess cortical thickness as candidate endophenotypes for trichotillomania. *Journal of Psychiatric Research, 59*, 167-173. doi:10.1016/j.jpsychires.2014.08.010

Odlaug, B. L., Chamberlain, S. R., Harvanko, A. M., & Grant, J. E. (2012). Age at onset in trichotillomania: Clinical variables and neurocognitive performance. *Primary Care Companion to the Journal of Clinical Psychiatry, 14*(4). doi:10.4088/PCC.12m01343

Odlaug, B. L., Chamberlain, S. R., Schreiber, L. R. N., & Grant, J. E. (2013). Where on the obsessive impulsive-compulsive spectrum does hair-pulling disorder belong? *International Journal of Psychiatry in Clinical Practice, 17*(4), 279-285. doi:10.3109/13651501.2013.828079

Odlaug, B. L., & Grant, J. E. (2010). Impulse-control disorders in a college sample: Results from the self-administered Minnesota impulse disorders interview (MIDI) *Primary Care Companion to the Journal of Clinical Psychiatry, 12*(2). doi:10.4088/PCC.09m00842whi

Ottens, A. J. (1981). Multifaceted treatment of compulsive hair pulling. *Journal of Behavior Therapy and Experimental Psychiatry, 12*(1), 77-80. doi:10.1016/0005-7916(81)90034-3

Owen, A. M., Roberts, A. C., Polkey, C. E., Sahakian, B. J., & Robbins, T. Q. (1991). Extra-dimensional versus intra-dimensional set shifting performance following frontal lobe excisions, temportal lobe excisions or amygdalo-hippocampectomy in man. *Neuropyschologica, 29*(10), 993-1006.

Owens Patton, T. (2006). Hey girl, am I more than my hair?: African American women and their struggles with beauty, body image, and hair. *NWSA Journal, 18*(2), 24-51. doi:10.1353/nwsa.2006.0037

Pauls, D. L., Abramovitch, A., Rauch, S. L., & Geller, D. A. (2014). Obsessive-compulsive disorder: An integrative genetic and neurobiological perspective. *Nature, 15*, 410-424. doi:10.1038/nrn3746

Pélissier, M., & O'Connor, K. (2004). Cognitive-behavioral treatment of trichotillomania, targeting perfectionism. *Clinical Case Studies, 3*, 57−69. doi:10.1177/1534650103258973

Penzel, F. (2003). *The hair-pulling problem: A complete guide to trichotillomania.* New York: Oxford University Press.

Pett, M. A., Sullivan, J. J., & Lackey, N. R. (2003). *Making sense of factor analysis: The use of factor analysis for instrument development in health care research.* Thousand Oaks, CA: Sage Publishing.

Phillips, B., Moulding, R., Kyrios, M., Nedeljkovic, M., & Mancuso, S. (2011). The relationship between body dysmorphic disorder symptoms and self-construals. *Clinical Psychologist, 15*, 10-16. doi:10.1111/j.1742-9552.2011.00004.x

Phillips, K. A., Stein, D. J., Rauch, S. L., Hollander, E., Fallon, B. A., Barsky, A., … Leckman, J. . (2010). Should an obsessive-compulsive spectrum grouping of disorders be included in DSM-V? *Depression and Anxiety, 27*(6), 528-555 doi:10.1002/da.20705

Platt, M. G. (2014). *Feelings of shame and dissociation in survivors of high and low betrayal traumas.* (Doctoral dissertation), University of Oregon, Oregon. Retrieved from http://pages.uoregon.edu/dynamic/jjf/theses/platt13.pdf

Rachman, S. (1997). A cognitive theory of obsessions. *Behaviour Research and Therapy, 35*(9), 793-802.

Rachman, S., & de Silva, P. (1978). Abnormal and normal obsessions. *Behaviour Research and Therapy, 16*(4), 233-248.

Radomsky, A. S. & Rackman, S. (2004). Symmetry, ordering and arranging compulsive behaviour. *Behaviour Research and Therapy, 42*, 893-913. doi:10.1016/j.brat.2003.07.001

Rapp, J. T., Miltenberger, R. G., Galensky, T. L., Ellingson, S. A., & Long, E. S. (1999). A functional analysis of hair pulling. *Journal of Applied Behavior Analysis, 32*(3), 329-337.

Rappee, R. M., Craske, M. G., Brown, T. A., & Barlow, D. H. (1996). Measurement of perceived control over anxiety-related events. *Behavior Therapy, 27*, 279-293. doi:10.1016/S0005-7894(96)80018-9

Rauch, S. L., Wright, C. I., Savage, C. R., Martis, B., McMullin, K. G., Wedig, M. M., . . . Keuthen, N. J. (2007). Brain activation during implicit sequence learning in individuals with trichotillomania. *Psychiatry Research - Neuroimaging, 154*(3), 233-240. doi:10.1016/j.pscychresns.2006.09.002

Rechenberger, H. G. (1976). Dynamic psychiatry's interpretation of trichotillomania. *Zeitschrift fur Psychosomatische Medizin und Psychoanalyse, 22*(1), 126-131.

Reeve, E. A., Bernstein, G. A., & Christenson, G. A. (1992). Clinical characteristics and psychiatric comorbidity in children with trichotillomania. *Journal of the American Academy of Child and Adolescent Psychiatry, 31*(1), 132-138.

Rehm, I., Moulding, R., & Nedeljkovic, M. (2015). Psychological treatment of trichotillomania: Update and future directions. *Australasian Psychiatry, 23(4*), 365-368. doi:10.1177/1039856215590029

Reinhardt, V. (2005). Hair pulling: A review. *Laboratory Animals, 39*(4), 361-369. doi:10.1258/002367705774286448

Rettew, D. C., Cheslow, D. C., Rapoport, J. L., Leonard, H. L., & Lenane, M. C. (1991). Neuropsychological test performance in trichotillomania: A further link with obsessive-compulsive disorder. *Journal of Anxiety Disorders, 5*, 225-235.

Reynolds, B. (2006). A review of delay-discounting research with humans: Relations to drug use and gambling. *Behavioural Pharmacology, 17*, 651-667. doi:10.1097/FBP.0b013e3280115f99

Ricketts, E. J., Brandt, B. C., & Woods, D. W. (2012). The effects of severity and causal explanation on social perceptions of hair loss. *Journal of Obsessive-Compulsive and Related Disorders, 1*(4), 336-343. doi:10.1016/j.jocrd.2012.07.007

Roberts, S., O'Connor, K., Aardema, F., & Bélanger, C. (2015). The impact of emotions on body-focused repetitive behaviors: Evidence from a non-treatment-seeking sample. *Journal of Behavior Therapy and Experimental Psychiatry, 46*, 189-197. doi: 10.1016/j.jbtep.2014.10.007

Roberts, S., O'Connor, K., & Bélanger, C. (2013). Emotion regulation and other psychological models for body-focused repetitive behaviors. *Clinical Psychology Review, 33*(6), 745-762. doi: 10.1016/j.cpr.2013.05.004

Robins, R. W., Hendin, H. M., & Trzeniewski, K. H. (2001). Measuring global self-esteem: Construct validation of a single-item measure and the Rosenberg self-esteem scale. *Personality and Social Psychology Bulletin, 27*(2), 161-161. doi:10.1177/0146167201272002

Roos, A., Fouche, J. P., Stein, D. J., & Lochner, C. (2013). White matter integrity in hair-pulling disorder (trichotillomania). *Psychiatry Research - Neuroimaging, 211*(3), 246-250. doi:10.1016/j.pscychresns.2012.08.005

Rosenberg, M. (1965). *Society and the adolescent self-image*. Princeton, NJ: Princeton University Press.

Rothbart, R., Amos, T., Siegfried, N., Ipser, J. C., Fineberg, N., Chamberlain, S. R., & Stein, D. J. (2013). Pharmacotherapy for trichotillomania. *Cochrane Database of Systematic Reviews, 11,* 1-39. doi:10.1002/14651858.CD007662.pub2

Rothbaum, B. O. (1992). The behavioral treatment of trichotillomania. *Behavioural Psychotherapy, 20*(1), 85-90.

Rothbaum, B. O. & Ninan, P. T. (1999). Manual for the cognitive-behavioral treatment of trichotillomania. In D. J. Stein, G. A. Christenson, & E. Hollander (Eds.), *Trichotillomania* (pp. 263-284). Washington, DC: American Psychiatric Press.

Rothbaum, B. O., Shaw, L., Morris, R., Ninan, P. T., Christenson, G. A., Pyle, R. L., & Mitchell, J. E. (1993). Prevalence of trichotillomania in a college freshman population. [Letter to the editor]. *Journal of Clinical Psychiatry, 54*(2), 72.

Rufer, M., Bamert, T., Klaghofer, R., Moritz, S., Schilling, L., & Weidt, S. (2014). Trichotillomania and emotion regulation: Is symptom severity related to alexithymia? *Psychiatry Research, 218*(1-2), 161-165. doi:10.1016/j.psychres.2014.03.029

Sah, D. E., Koo, J., & Price, V. H. (2008). Trichotillomania. *Dermatologic Therapy, 21*(1), 13-21. doi:10.1111/j.1529-8019.2008.00165.x

Salkovskis, P. M. & Harrison, J. (1984). Abnormal and normal obsessions: A replication. *Behaviour Research and Therapy, 22*(5), 549-552.

Scott, C., & Stevenson, J. L. (April, 2015). *Exploring the psychological constructs of perfectionism and self-esteem in trichotillomania.* Poster presented at the 22nd annual Trichotillomania Learning Centre conference, Arlington, VA.

Schlosser, S., Black, D. W., Blum, N., & Goldstein, R. B. (1994). The demography, phenomenology, and family history of 22 persons with compulsive hair pulling. *Annals of Clinical Psychiatry, 6*(3), 147-152. doi:1040-1237/94/0900-0147S07.00/1

Schnurr, R. G., & Davidson, S. (1989). Trichotillomania in a ten year old boy: Gender identity issues formulated in terms of individual and family factors. *Canadian Journal of Psychiatry, 34*(7), 721-724.

Sharpe, L. (2002). A reformulated cognitive-behavioral model of problem gambling. A biopsychosocial perspective. *Clinical Psychology Review, 22*, 1-25. doi:10.1016/S0272-7358(00)00087-8

Shusterman, A., Feld, L., Baer, L., & Keuthen, N. (2009). Affective regulation in trichotillomania: Evidence from a large-scale internet survey. *Behaviour Research and Therapy, 47*(8), 637-644. doi:10.1016/j.brat.2009.04.004

Sica, C., Bottesi, G., Orsucci, A., Pieraccioli, Sighinolfi, C.,Ghisi, M. (2015). "Not just right experiences" are specific to obsessive-compulsive disorder: Further evidence from Italian clinical samples. *Journal of Anxiety Disorders, 31*, 73-83. doi:10.1016/j.janxdis.2015.02.002

Simons, J. S. & Gaher, R. M. (2005). The distress tolerance scale: Development and validation of a self-report measure. *Motivation and Emotion, 29*(2), 83-102. doi:10.1007/s11031-005-7955-3

Singer, H. S. & Minzer, K. (2003). Neurobiology of Tourette's syndrome: Concepts of neuroanatomic localization and neurochemical abnormalities. *Brain and Development, 25* (Suppl. 1), S70-S84.

Singh, A. N., & Maguire, J. (1989). Trichotillomania and incest. *British Journal of Psychiatry, 155*, 108-110.

Singisetti, S., Chamberlain, S. R., & Fineberg, N. A. (2010). Neurobiology of trichotillomania. In A. V. Kalueff, J. L. La Porte, & C. L. Bergner (Eds.), *Neurobiology of grooming behaviour* (pp. 252-270). Cambridge: Cambridge University Press.

Slaney, R. G., Rice, K. G., Mobley, M., Trippi, J., & Ashby, J. (2001). The revised almost perfect scale. *Measurement and Evaluation in Counseling and Developments, 34*, 130-145.

Slikboer, R., Nedeljkovic, M., Bowe, S. J., & Moulding, R. (2015). A systematic review and meta-analysis of behaviourally based psychological interventions and pharmacological interventions for trichotillomania. *Clinical Psychologist.* Advance online publication. doi:10.1111/cp.12074

Smith, J. A. (1996). Beyond the divide between cognition and discourse: Using interpretative phenomenological analysis in health psychology. *Psychology and Health, 11*, 261-271. doi:10.1080/08870449608400256

Smith, J. A., & Osborn, M. (2008). Interpretative phenomenological analysis. In J. A. Smith (Ed.) *Qualitative psychology: A practical guide to research methods* (pp. 53-80). London: Sage Publishing.

Snorrason, I., Belleau, E. L., & Woods, D. W. (2012). How related are hair pulling disorder (trichotillomania) and skin picking disorder? A review of evidence for

comorbidity, similarities and shared etiology. *Clinical Psychology Review, 32*(7), 618-629. doi:10.1016/j.cpr.2012.05.008

Soriano, J. L., O'Sullivan, R. L., Baer, L., Phillips, K. A., McNally, R. J., & Jenike, M. A. (1996). Trichotillomania and self-esteem: A survey of 62 female hair pullers. *Journal of Clinical Psychiatry, 57*(2), 77-82.

Sperling, M. (1968). Trichotillomania, trichophagy, and cyclic vomiting. A contribution to the psychopathology of female sexuality. *International Journal of Psycho-Analysis, 49*(4), 682-690.

Spruijt, B. M., van Hooff, J. A., & Gispen, W. H. (1992). Ethology and neurobiology of grooming behavior. *Physiological Reviews, 72*(3), 825-852.

Stanley, M. A., Borden, J. W., Bell, G. E., & Wagner, A. L. (1994). Nonclinical hair pulling: Phenomenology and related psychopathology. *Journal of Anxiety Disorders, 8*(2), 119-130.

Stanley, M. A., Borden, J. W., Mouton, S. G., & Breckenridge, J. K. (1995). Nonclinical hair-pulling: Affective correlates and comparison with clinical samples. *Behaviour Research and Therapy, 33*(2), 179-186. doi:10.1016/0005-7967(94)E0018-E

Stanley, M. A., Breckenridge, J. K., Snyder, A. G., & Novy, D. M. (1999). Clinician-rated measures of hair pulling: A preliminary psychometric evaluation. *Journal of Psychopathology and Behavioral Assessment, 21*(2), 157-170. doi:10.1023/A:1022160522908

Stanley, M. A. & Cohen, L. J. (1999). Trichotillomania and obsessive-compulsive disorder. In D. J. Stein, G. A. Christenson, & E. Hollander (Eds.), *Trichotillomania* (pp. 225-262). Washington, DC: American Psychiatric Press.

Stanley, M. A., Hannay, H. J., & Breckenridge, J. K. (1997). The neuropsychology of trichotillomania. *Journal of Anxiety Disorders, 11*(5), 473-488.

Stanley, M. A. & Mouton, S. G. (1996). Trichotillomania treatment manual. In V.B. Van Hasselt & M. Hersen (Eds.), *Sourcebook of psychological treatment manuals for adult disorders* (pp. 657-687). New York: Plenum Press.

Stanley, M. A., Prather, R. C., Wagner, A. L., Davis, M. L., & Swann, A. C. (1993). Can the Yale-Brown obsessive-compulsive scale be used to assess trichotillomania? A preliminary report. *Behaviour Research and Therapy, 31*(2), 171-177.

Stanley, M. A., Swann, A. C., Bowers, T. C., Davis, M. L., & Taylor, D. J. (1992). A comparison of clinical features in trichotillomania and obsessive-compulsive disorder. *Behaviour Research and Therapy, 30*(1), 39-44. doi:10.1016/0005-7967(92)90094-W

Starcevic, V. (2015). Trichotillomania: Impulsive, compulsive or both? *Australian and New Zealand Journal of Psychiatry, 49*(7), 660-661. doi:10.1177/0004867415577981

Starcevic, V., & Janca, A. (2011). Obsessive–compulsive spectrum disorders: Still in search of the concept-affirming boundaries. *Current Opinion in Psychiatry, 24*, 55-60. doi:10.1097/YCO.0b013e32833f3b58

Stein, D. J., Chamberlain, S. R., & Fineberg, N. (2006). An A-B-C model of habit disorders: Hair-pulling, skin-picking, and other stereotypic conditions. *CNS Spectrums, 11*(11), 824-827.

Stein, D. J., Coetzer, R., Lee, M., Davids, B., & Bouwer, C. (1997). Magnetic resonance brain imaging in women with obsessive-compulsive disorder and

trichotillomania. *Psychiatry Research - Neuroimaging, 74*(3), 177-182. doi:10.1016/S0925-4927(97)00010-3

Stein, D. J., Flessner, C. A., Franklin, M., Keuthen, N. J., Lochner, C., & Woods, D. W. (2008). Is trichotillomania a stereotypic movement disorder? An analysis of body-focused repetitive behaviors in people with hair-pulling. *Annals of Clinical Psychiatry, 20*(4), 194-198. doi:10.1080/10401230802435625

Stein, D. J., Grant, J. E., Franklin, M. E., Keuthen, N., Lochner, C., Singer, H. S., & Woods, D. W. (2010). Trichotillomania (hair pulling disorder), skin picking disorder, and stereotypic movement disorder: Toward DSM-V. *Depression and Anxiety, 27*(6), 611-626. doi:10.1002/da.20700

Stein, D. J. & Hollander, E. (1995). Obsessive-compulsive spectrum disorders. [Letter to the editor]. *Journal of Clinical Psychiatry, 56*(6), 265-267.

Stein, D. J., Mullen, L., Islam, M. N., Cohen, L., DeCaria, C. M., & Hollander, E. (1995). Compulsive and impulsive symptomatology in trichotillomania. *Psychopathology, 28*(4), 208-213.

Stein, D. J., Van Heerden, B., Hugo, C., Van Kradenburg, J., Warwick, J., Zungu-Dirwayi, N., & Seedat, S. (2002). Functional brain imaging and pharmacotherapy in trichotillomania: Single photon emission computed tomography before and after treatment with the selective serotonin reuptake inhibitor citalopram. *Progress in Neuro-Psychopharmacology and Biological Psychiatry, 26*(5), 885-890. doi:10.1016/S0278-5846(01)00334-7

Stemberger, R. M. T., Stein, D. J., & Mansueto, C. S. (2003). Behavioral and pharmacological treatment of trichotillomania. *Brief Treatment and Crisis Intervention, 3,* 339-352. doi:10.1093/brief-treatment/mhg025

Stemberger, R. M. T., Thomas, A. M., Mansueto, C. S., & Carter, J. G. (2000). Personal toll of trichotillomania: Behavioral and interpersonal sequelae. *Journal of Anxiety Disorders, 14*(1), 97-104. doi:10.1016/S0887-6185(99)00028-6

Stevanovic, D. (2011). Quality of life enjoyment and satisfaction questionnaire – short form for quality of life assessments in clinical practice: A psychometric study. *Journal of Psychiatric and Mental Health Nursing, 18,* 744-750. doi:10.1111/j.1365-2850.2011.01735.x

Streiner, D. L. (2003). Starting at the beginning: An introduction to coefficient alpha and internal consistency. *Journal of Personality Assessment, 80*(1), 99-103. doi:10.1207/S15327752JPA8001_18

Swedo, S. E. (1989). Rituals and releasers: An ethological model of obsessive compulsive disorder. In J. Rapoport (Ed.), *Obsessive-compulsive disorder in children and adolescents.* Washington, DC: American Psychiatric Press.

Swedo, S. E., & Leonard, H. L. (1992). Trichotillomania: An obsessive-compulsive spectrum disorder? *Psychiatric Clinics of North America, 15*(4), 777-790.

Swedo, S. E., Leonard, H. L., Rapoport, J. L., Lenane, M. C., Goldberger, E. L., & Cheslow, D. L. (1989). A double-blind comparison of clomipramine and desipramine in the treatment of trichotillomania (hair pulling). *New England Journal of Medicine, 321*(8), 497-501.

Swedo, S. E., & Rapoport, J. L. (1991). Annotation: Trichotillomania. *Journal of Child Psychology and Psychiatry and Allied Disciplines, 32*(3), 401-409.

Swedo, S. E., Rapoport, J. L., Leonard, H. L., Scapiro, M. B., Rapoport, S. I., & Grady, C. L. (1991). Regional cerebral glucose metabolism of women with trichotiollomania. *Archives of General Psychiatry, 48*, 828-833.

Synnott, A. (1987). Shame and glory: A sociology of hair. *The British Journal of Sociology, 38*(3), 381-413.

Tabachnick, B. G., & Fidell, L. S. (2007). *Using multivariate statistics* (5th ed.). Boston, MA: Pearson Education.

Talbot, J. A., Talbot, N. L., & Tu, X. (2004). Shame-proneness as a diathesis for dissociation in women with histories of childhood sexual abuse. *Journal of Traumatic Stress, 17*(5), 445-448. doi:10.1023/B:JOTS.0000048959.29766.ae

Tangney, J. P., Wagner, P., & Gramzow, R. (1992). Proneness to shame, proneness to guilt, and psychopathology. *Journal of Abnormal Psychology, 101*(3), 469-478. doi:10.1037/0021-843X.101.3.469

Tattersall, M. L. (1992). Further comments of trichotillomania. [Letter to the editor]. *American Journal of Psychiatry, 149*(2), 284.

Thurstone, L. L. (1947). *Multiple factor analysis.* Chicago: University of Chicago Press.

Toledo, E. L., Muniz, E. D., Brito, A. M. C., de Abreu, C. N., & Tavares, H. (2014). Group treatment for trichotillomania: Cognitive-behavioral therapy versus supportive therapy. *Journal of Clinical Psychiatry, 76*(4), 447-455. doi:10.4088/JCP.13m08964

Tolin, D. F., Worhunsky, P., & Maltby, N. (2006). Are "obsessive" beliefs specific to OCD? A comparison across anxiety disorders. *Behaviour Research and Therapy, 44*, 469-480. doi:10.1016/j.brat.2005.03.007

Tükel, R., Keser, V., Karali, N. T., Olgun, T. Ö., & Çalikuşu, C. (2001). Comparison of clinical characteristics in trichotillomania and obsessive-compulsive disorder. *Journal of Anxiety Disorders, 15*(5), 433-441. doi:10.1016/S0887-6185(01)00074-3

Tung, E. S., Flessner, C. A., Grant, J. E., & Keuthen, N. J. (2015). Predictors of life disability in trichotillomania. *Comprehensive Psychiatry, 56*, 239-244. doi:10.1016/j.comppsych.2014.09.018

Twohig, M. P., & Woods, D. W. (2004). A preliminary investigation of acceptance and commitment therapy and habit reversal as a treatment for trichotillomania. *Behavior Therapy, 35*(4), 803-820. doi:10.1016/S0005-7894(04)80021-2

Tynes, L. L., White, K., & Steketee, G. S. (1990). Toward a new nosology of obsessive compulsive disorder. *Comprehensive Psychiatry, 31*(5), 465-480.

Udachina, A., Thewissen, V., Myin-Germeys, I., Fitzpatrick, S., O'Kane, A., & Bentall, R. P. (2009). Understanding the relationships between self-esteem, experiential avoidance, and paranoia. *The Journal of Nervous and Mental Disease, 197*(9), 661-669. doi:10.1097/NMD.0b013e3181b3b2ef

Ullman, J. B. (2007). Structural equation modelling. In B. G. Tabachnick & L. S. Fidell (Eds.), *Using Multivariate Statistics* (5th ed.). (pp. 676-780). Boston, MA: Pearson Education.

van Minnen, A., Hoogduin, K. A. L., Keijsers, G. P. J., Hellenbrand, I., & Hendriks, G. J. (2003). Treatment of trichotillomania with behavioral therapy or fluoxetine: A randomized, waiting-list controlled study. *Archives of General Psychiatry, 60*(5), 517-522. doi:10.1001/archpsyc.60.5.517

Vavrichek, R. G. & Golomb, S. G. (2000). *The hair pulling "habit" and you: How to solve the trichotillomania puzzle* (revised ed.). Silver Spring, MD: Writers' Cooperative of Greater Washington.

Veale, D. & Neziroglu, F. A. (2010). *Body dysmorphic disorder: A treatment manual*. Malden, MA: Wiley-Blackwell.

Walderhaug, L. P. (2015). *Acceptance and commitment therapy enhanced behavioural therapy for trichotillomania in a group setting: The patients' perspective – A qualitative study of experience and meaning in eight respondents with TTM.* (Master's thesis). Norwegian University of Science and Technology, Norway. Retrieved from http://brage.bibsys.no/xmlui/handle/11250/292968

Walther, M. R., Snorrason, I., Flessner, C. A., Franklin, M. E., Burkel, R., & Woods, D. W. (2014). The trichotillomania impact project in young children (TIP-YC): Clinical characteristics, comorbidity, functional impairment and treatment utilization. *Child Psychiatry and Human Development, 45*(1), 24-31. doi:10.1007/s10578-013-0373-y

Watson, J. B. (1913). Psychology as the behaviorist views it. *Psychological Review, 20*(2), 158-177. doi:10.1037/h0074428

Weingarden, H., & Renshaw, K. D. (2014). Shame in the obsessive compulsive related disorders: A conceptual review. *Journal of Affective Disorders, 171*, 74-84. doi:10.1016/j.jad.2014.09.010

Welch, J. M., Lu, J., Rodriguez, R. M., Trotta, N. C., Peca, J., Ding, J., … Feng, G. (2007). Cortico-striatal synaptic defects and OCD-like behaviours in Sapap3-mutant mice. *Nature, 448*(23), 894-901. doi:10.1038/nature06104

Wetterneck, C. T. & Woods, D. W. (2007). A contemporary behavior analytic model of trichotillomania. In D. W. Woods & J. Kanter (Eds.), *Undertsanding behavior disorders: A contemporary behavioral perspective* (pp. 157-180). Oakland, CA: New Harbinger Publications.

Wetterneck, C. T., Woods, D. W., Norberg, M. M., & Begotka, A. M. (2006). The social and economic impact of trichotillomania: Results from two nonreferred samples. *Behavioral Interventions, 21*(2), 97-109. doi:10.1002/bin.211

White, M. P., Shirer, W. R., Molfino, M. J., Tenison, C., Damoiseaux, J. S., & Greicius, M. D. (2013). Disordered reward processing and functional connectivity in trichotillomania: A pilot study. *Journal of Psychiatric Research, 47*(9), 1264-1272. doi:10.1016/j.jpsychires.2013.05.014

Whiteside, S. P. & Lynam, D. R. (2001). The five factor model and impulsivity: Using a structural model of personality to understand impulsivity. *Personality and Individual Differences, 30*, 669-689.

Wilhelm, S., Berman, N. C., Keshaviah, A., Schwartz, R. A., & Steketee, G. (2015). Mechanisms of change in cognitive therapy for obsessive compulsive disorder: Role of maladaptive beliefs and schemas. *Behaviour Research and Therapy, 65*, 5-10. doi:10.1016/j.brat.2014.12.006

Winchel, R. M., Jones, J. S., Molcho, A., Parsons, B., Stanley, B., & Stanley, M. (1992). The Psychiatric Institute trichotillomania scale (PITS). *Psychopharmacology Bulletin, 28*(4), 463-476. doi:10.1016/S0191-8869(00)00064-7

Winchel, R. M., Jones, J. S., Stanley, B., Molcho, A., & Stanley, M. (1992). Clinical characteristics of trichotillomania and its response to fluoxetine. *Journal of Clinical Psychiatry, 53*(9), 304-308.

Woods, D. W., Flessner, C. A., Franklin, M. E., Keuthen, N. J., Goodwin, R. D., Stein, D. J., … Trichotillomania Learning Centre Scientific Advisory Board. (2006). The trichotillomania impact project (TIP): Exploring phenomenology, functional impairment, and treatment utilization. *Journal of Clinical Psychiatry, 67*(12), 1877-1888.

Woods, D. W., & Houghton, D. C. (2014). Diagnosis, evaluation, and management of trichotillomania. *Psychiatric Clinics of North America, 37*(3), 301-317. doi:10.1016/j.psc.2014.05.005

Woods, D. W., & Miltenberger, R. G. (2006). Introduction to tic disorders, trichotillomania, and other repetitive behavior disorders: Behavioral approaches to analysis and treatment. In D. W. Woods & R. G. Miltenberger (Eds.) *Tic disorders, trichotillomania, and other repetitive behavior disorders: Behavioral approaches to analysis and treatment* (pp. 1-7). New York, NY: Springer.

Woods, D. W., Wetterneck, C. T., & Flessner, C. A. (2006). A controlled evaluation of acceptance and commitment therapy plus habit reversal for trichotillomania. *Behaviour Research and Therapy, 44*(5), 639-656. doi:10.1016/j.brat.2005.05.006

World Health Organization [WHO]. (1992). *The ICD-10 classification of mental and behavioural disorders: Clinical descriptions and diagnostic guidelines*. Geneva: World Health Organization.

Worthington, R. L. & Whittaker, T. A. (2006). Scale development research: A content analysis and recommendations for best practices. *The Counselling Psychologist, 34*, 806-838. doi:10.1177/0011000006288127

Wright, H. H. & Holmes, G. R. (2013). Trichotillomania (hair pulling) in toddlers. *Psychological Reports, 92*, 228-230.

Wu, K. D. & Carter, S. A. (2008). Further investigation of the obsessive beliefs questionnaire: Factor structure and specificity of relations with OCD symptoms. *Journal of Anxiety Disorders, 22*, 824-836. doi:10.1016/j.janxdis.2007.08.008

Zaidens, S. H. (1951a). Self-inflicted dermatoses and their psychodynamics. *Journal of Nervous and Mental Disease, 113(*5), 395-404.

Zaidens, S. H. (1951b). The skin: Psychodynamic and psychopathological concepts. *Journal of Nervous and Mental Disease, 113*(5), 388-394.

Züchner, S., Cuccaro, M. L., Tran-Viet, K. N., Cope, H., Krishnan, R. R., Pericak-Vance, M. A., . . . Ashley-Koch, A. (2006). SLITRK1 mutations in trichotillomania. *Molecular Psychiatry, 11*(10), 887. doi:10.1038/sj.mp.4001898

Züchner, S., Wendland, J. R., Ashley-Koch, A. E., Collins, A. L., Tran-Viet, K. N., Quinn, K., . . . Murphy, D. L. (2009). Multiple rare SAPAP3 missense variants in trichotillomania and OCD. *Molecular Psychiatry, 14*(1), 6-9. doi:10.1038/mp.2008.83

Zucker, N., Von Holle, A., Thornton, L. M., Strober, M., Plotnicov, K., Klump, K. L., . . . Bulik, C. M. (2011). The significance of repetitive hair-pulling behaviors in eating disorders. *Journal of Clinical Psychology, 67*(4), 391-403. doi:10.1002/jclp.20770

Appendix A

Author Indication Form (cf. Chapter 6)

SWINBURNE UNIVERSITY OF TECHNOLOGY

Swinburne Research

Authorship Indication Form
For PhD (including associated papers) candidates

NOTE

This Authorship Indication form is a statement detailing the percentage of the contribution of each author in each associated 'paper'. This form must be signed by each co-author and the Principal Coordinating Supervisor. This form must be added to the publication of your final thesis as an appendix. Please fill out a separate form for each associated paper to be included in your thesis.

DECLARATION

We hereby declare our contribution to the publication of the 'paper' entitled:

THE ROLE OF COGNITIONS AND BELIEFS IN TRICHOTILLOMANIA: A QUALITATIVE STUDY USING INTERPRETATIVE PHENOMENOLOGICAL ANALYSIS.

First Author

Name: IMOGEN REHM Signature:

Percentage of contribution: 85% Date: 27/11/2015

Brief description of contribution to the 'paper' and your central responsibilities/role on project:

RESEARCH DESIGN, PARTICIPANT RECRUITMENT, TESTING, QUAL. INTERVIEWS, QUAL + QUANT DATA ANALYSIS, INTERPRETATION, MANUSCRIPT WRITE UP.

Second Author

Name: MAJA NEDELJKOVIC Signature:

Percentage of contribution: 5% Date: __/__/____

Brief description of your contribution to the 'paper':

SUPERVISORY INPUT

Third Author

Name: ANNA THOMAS Signature:

Percentage of contribution: 5 % Date: __/__/____

Brief description of your contribution to the 'paper':

SUPERVISORY INPUT

Fourth Author

Name: RICHARD MOULDING Signature:

Percentage of contribution: 5 % Date: __/__/____

Brief description of your contribution to the 'paper':

SUPERVISORY INPUT

Principal Coordinating Supervisor: Name: Signature: Maja Nedeljkovic

Date: 4/2/2016.

In the case of more than four authors please attach another sheet with the names, signatures and contribution of the authors.

Appendix B

Copyright Permissions (cf. Chapter 6)

CAMBRIDGE
UNIVERSITY PRESS

Australia & New Zealand
477 Williamstown Road
Port Melbourne
Victoria 3207
Australia

Correspondence
Private Bag 31
Port Melbourne
Victoria 3207
Australia

www.cambridge.edu.au

Telephone +61 (03) 8671 1400
Fax +61 (03) 9676 9966
Email info@cambridge.edu.au
ABN 28 508 204 178

Imogen Rehm,

Hawthorn, VIC, 3122

Tuesday 27 October 2015

Dear Ms. Rehm

Rehm, I., Nedeljkovic, M., Thomas, A., Moulding, R. (2015). 'The role of cognitions and beliefs in trichotillomania: A qualitative study using interpretative phenomenological analysis', *Behaviour Change*, Cambridge University Press

Thank you for notification dated 22/10/2015 in which you requested permission to include an adapted version of your journal article 'The role of cognitions and beliefs in trichotillomania: A qualitative study using interpretative phenomenological analysis', taken from *Behaviour Change (2015)* in your PHD Thesis for The Swinburne University of Technology under the working title '*Development of a measure of cognitions and beliefs in trichotillomania*'.

Non-Exclusive Permission is granted subject to the following conditions:

1. The integrity of the material must be assured.

2. That you have checked that the passage(s) in question do(es) not acknowledge any other source(s).

   Cambridge gives no warranty or indemnity in respect of any third party copyright material in the article/chapter and the licensee must seek their own permission clearance.

3. Full acknowledgement of the source should be given (author, title, Cambridge University Press, year of publication) together with the appropriate copyright notice, to appear with the article.

4. That you include a link to our online catalogue.

http://journals.cambridge.org/action/displayAbstract?fromPage=online&aid=9909253&fulltextType=RA&fileId=S081348391500011X

Yours sincerely,

C.T. Jones

Catherine Tudor Jones
Administrative Coordinator / Executive Assistant
Cambridge University Press, Australia and New Zealand

Appendix C

Participant Recruitment Advertisement (Study 1, Chapter 6)

Do you ever engage in distressing hair-pulling?

For individuals with a psychological condition called "Trichotillomania", hair-pulling is a compulsive behaviour in which hair is removed from the scalp, eyebrows, eyelashes and other bodily areas until noticeable hair loss results. Trichotillomania and the associated hair loss often causes embarrassment, distress and disruption to many important areas of life.

Researchers at Swinburne University are currently launching an investigation into this poorly-understood condition, which has attracted very little Australian research. This is why we need your help!

If you are aged 18 and older, and engage in hair-pulling that you find distressing and is not done for cosmetic purposes

you may be eligible to participate in this study, which aims to explore how thoughts and beliefs contribute to the onset and maintenance of chronic hair-pulling. It is hoped that the findings of this research will inform the development of effective treatment strategies for Trichotillomania. Participants will be asked to complete questionnaires and engage in interviews with the researchers regarding psychological experiences surrounding hair-pulling.

For more information, please do not hesitate to contact either:

Dr Maja Nedeljkovic, Principle Investigator, Ph: (03) 9214 4428, e-mail: mnedeljkovic@swin.edu.au
Miss Imogen Rehm, Student Investigator, Ph: (03) 9214 5553, e-mail: irehm@swin.edu.au

Appendix D

Minnesota Trichotillomania Assessment Inventory-II (MTAI-II; Christenson, Mackenzie, & Mitchell, 1991)

The MTAI-II is a copyrighted instrument that cannot be reproduced in this thesis. For a copy of the MTAI-II, please consult:

Christenson, G. A., Mackenzie, T. B., & Mitchell, J. E. (1991). Characteristics of 60 adult chronic hair pullers. *American Journal of Psychiatry, 148*, 365-370.

Appendix E

Psychiatric Institute Trichotillomania Scale (PITS; Winchel, 1992)

The PITS is a copyrighted instrument that cannot be reproduced in this thesis. For a copy of the PITS, please consult:

Winchel, R. M., Jones, J. S., Molcho, A., Parsons, B., Stanley, B., & Stanley, M. (1992). The Psychiatric Institute trichotillomania scale (PITS). *Psychopharmacology Bulletin, 28*(4), 463-476. doi:10.1016/S0191-8869(00)00064-7

Appendix F

Yale-Brown Obsessive-Compulsive Scale: Trichotillomania version (YBOCS:TM; Stanley, Prather, Wagner, Davis, & Swann, 1993)

The YBOCS:TM is a copyrighted instrument that cannot be reproduced in this thesis. For a copy of the YBOCS:TM, please consult:

Stanley, M. A., Prather, R. C., Wagner, A. L., Davis, M. L., & Swann, A. C. (1993). Can the Yale-Brown obsessive-compulsive scale be used to assess trichotillomania? A preliminary report. *Behaviour Research and Therapy, 31*(2), 171-177.

Appendix G

The Massachusetts General Hospital Hair Pulling Scale (MGHHPS; Keuthen et al., 1995; O'Sullivan et al., 1995)

The MGHHPS is a copyrighted instrument that cannot be reproduced in this thesis. For a copy of the MGHHPS, please consult:

Keuthen, N. J., O'Sullivan, R. L., Ricciardi, J. N., Shera, D., Savage, C. R., Borgmann, A. S., . . . Baer, L. (1995). The Massachusetts General Hospital (MGH) hairpulling scale: I. Development and factor analyses. *Psychotherapy and Psychosomatics, 64*(3-4), 141-145.

Appendix H

Obsessive Compulsive Inventory-Revised (Foa et al., 2002)

The OCI-R is a copyrighted instrument that cannot be reproduced in this thesis. For a copy of the OCI-R, please consult:

Foa, E. B., Huppert, J. D., Leiberg, S., Langer, R., Kichic, R., Hajcak, G., & Salkovskis, P. M. (2002). The obsessive-compulsive inventory: Development and validation of a short version. *Psychological Assessment, 14*(4), 485-496. doi:10.1037//1040-3590.14.4.485

Appendix I

The Obsessive Beliefs Questionnaire-44 (OBQ-44; Obsessive Compulsive Cognitions Working Group, 2001, 2005)

The OBQ-44 is a copyrighted instrument that cannot be reproduced in this thesis. For a copy of the OBQ-44 please consult:

Obsessive Compulsive Cognitions Working Group [OCCWG]. (2005). Psychometric validation of the obsessive belief questionnaire and interpretation of intrusions inventory – Part 2: Factor analyses and testing of a brief version. *Behaviour Research and Therapy, 43*, 1527-1542. doi:10.1016.j.brat.2004.07.010

Appendix J

Brown Assessment of Beliefs Scale (BABS; Eisen et al., 1998)

The BABS is a copyrighted instrument that cannot be reproduced in this thesis. For a copy of the BABS please consult:

Eisen, J. L., Phillips, K. A., Baer, L., Beer, D. A., Atala, K. D., & Rasmussen, S. A. (1998). The Brown assessment of beliefs scale: Reliability and validity. *American Journal of Psychiatry, 155*, 102-108.

Appendix K

Quality of Life Enjoyment and Satisfaction Questionnaire-Short Form (Q-LES-Q-SF; Stevanovic, 2011)

The Q-LES-Q-SF is a copyrighted instrument that cannot be reproduced in this thesis. For a copy of the Q-LES-Q-SF please consult:

Stevanovic, D. (2011). Quality of life enjoyment and satisfaction questionnaire – short form for quality of life assessments in clinical practice: A psychometric study. *Journal of Psychiatric and Mental Health Nursing, 18,* 744-750. doi:10.1111/j.1365-2850.2011.01735.x

Appendix L

Qualitative Interview Guide (Study 1, Chapter 6)

A) Introduction:

Tell me about your experiences with hairpulling.

B) Hairpulling Episodes:

1. *Before:*

Describe what typically happens just before you begin hairpulling.

PROMPT: Locations, postures, feelings, etc.

What do hairpulling urges feel like to you?

PROMPT: Thoughts, feelings, emotions involved.

Can hairpulling commence for you even without feeling an urge to do so? Explain.

If you manage not to pull in response to an urge what happens?

Describe the kinds of physical sensations you have before a hairpulling episode.

If you manage not to pull in response to a physical sensation, what happens?

Can hairpulling commence for you even without feeling these physical sensations?

Describe the kinds of emotions or feelings you have before a hairpulling episode?

When you get this emotion/feeling just before pulling, do you have any thoughts that follow on from the feeling? Describe.

If you manage not to pull because of these emotions, what happens?

Can hairpulling commence for you even without feeling these emotions?

Do you have any triggering thoughts or memories just before a hairpulling episode? Describe.

If you manage not to pull because of these thoughts/memories, what happens?

Can hairpulling commence for you even without these thoughts/memories?

Are there certain times when you **don't** begin hairpulling even when the experiences that normally trigger you to do so are present? (i.e., what prevents you from pulling when you normally would?)

What thoughts and feelings do you have when this happens?

2. *During*

Describe what normally happens for you during a hairpulling episode.

PROMPT: Where, what, who?

<u>If others are around when pulling</u>:

How do they respond to your hairpulling?

How do you react to these kinds of responses (thoughts & feelings)?

How to you go about removing the hair? (e.g., fingers/implements)

Tell me about any physical sensations you have while hairpulling.

Are there particular physical sensations you 'set out' to achieve by hairpulling?

Tell me about any emotions or feelings that you typically have during a hairpulling episode.

PROMPT: increasing/decreasing, associated thoughts, intensity.

Tell me about the kinds of thoughts that you typically have during a hairpulling episode (if any).

PROMPT: about you, others, memories, experiences.

During hairpulling, are you typically aware that you're pulling or are you typically unaware that you're pulling? Explain.

PROMPT: what it feels like to be aware/unaware while hairpulling

2. A) Hairpulling Behaviours:

Tell me about the behaviours you engage in with the hair strands during a hairpulling episode.

PROMPT: twirling, biting, etc.

What are your thoughts about the reason/s why you do this with the hair?

<u>If the behaviour is indicated as being pleasurable</u>: Can you explain what makes this pleasurable?

If you didn't engage in these behaviours, what do you think would happen?

PROMPT: how would you feel?

3. *After*

Tell me about how a hairpulling episode typically stops for you.

PROMPT: when someone walks in, when you have to go to work/ activity, time elapsed, self-talk to stop)?

Can you tell me what you think makes it easier/harder for you to stop a hairpulling episode?

Describe any physical sensations you have after a hairpulling episode.

What sort of emotions or feelings do you have after a hairpulling episode?

PROMPT: increasing/decreasing, associated thoughts.

Tell me about the kinds of thoughts that you have after a hairpulling episode.

PROMPT: about you, others, memories, experiences.

3. A) Post-pulling Behaviours

Once a hairpulling episode stops, what do you do next?

PROMPT: special rituals, mirror checking, continue playing with strands?

What are your thoughts about the purpose/reasons why you engage in this post-pulling behaviour?

If you didn't engage in these behaviours, what do you think would happen?

PROMPT: how would you feel?

C) The Function of Hairpulling:

What are your thoughts on the reason/s why you pull? What **purpose** do you think it serves for you?

PROMPT: reduce internal sensations/to achieve particular sensations/avoidance/coping

Have you noticed anything that makes your hairpulling worse? Describe.

D) Conclusion & Researcher Observations:

Is there anything else you'd like to say about your hairpulling or Trichotillomania in general?

Is there anything else that you think is important to mention, but I haven't asked you about?

Appendix M

Participant Information and Consent Form (Study 1, Chapter 6)

PARTICIPANT CONSENT INFORMATION STATEMENT AND CONSENT FORM

Swinburne University of Technology

Project Title:
A Qualitative Investigation of the Cognitions Experienced in Episodes of Chronic Hairpulling: Informing Cognitive-Behavioural Models of Trichotillomania

Principal Investigator:
Dr Maja Nedeljkovic (Lecturer, Faculty of Life and Social Sciences, Swinburne University of Technology)
Student Investigator:
Miss Imogen Rehm (Student Investigator, Faculty of Life and Social Sciences, Swinburne University of Technology)
Associate Investigators:
Dr Richard Moulding (Lecturer, Faculty of Life and Social Sciences, Swinburne University of Technology)
Dr Anna Thomas (Research Fellow, Faculty of Life and Social Sciences, Swinburne University of Technology)

1. Introduction

You are invited to take part in this research project investigating Trichotillomania (chronic hairpulling). This Consent Information Statement provides you with detailed information on the research project. It explains what participation in this research project will involve, in order to help you decide if you would like to take part. This Consent Information Statement is for you to keep.

2. Project and researcher interests

The results of this research project will be used by Student Investigator, Miss Imogen Rehm, in partial completion of her Doctorate in (Clinical) Psychology. The research findings will also be used to inform Swinburne University's development of a treatment program for Trichotillomania in conjunction with the Anxiety Recovery Centre of Victoria.

3. What is this project about and what is its purpose?

This research project will investigate a psychological condition called Trichotillomania. Individuals with Trichotillomania repeatedly and compulsively remove hair from their scalp, eyebrows, eyelashes and other bodily areas. This repeated hairpulling (which is often experienced as uncontrollable) typically results in noticeable hair loss, which is embarrassing, distressing, and accompanied by attempts to 'hide' the hair loss. Self-esteem, occupational and educational functioning, and social relationships can all be disrupted by Trichotillomania. Although Trichotillomania has traditionally been thought of as a "rare" disorder, recent evidence has found that this is not the case; it is now estimated that approximately 3% of the US population is affected.

Unfortunately, very little research has been conducted on Trichotillomania in Australia. Further, while it is generally understood that negative emotions play a large role in triggering 'episodes' of hairpulling and maintaining the disorder, the role of thoughts and beliefs in Trichotillomania is not yet known. As thoughts and emotions often interact together to influence behaviours

(including hairpulling), reaching an understanding of how this occurs in Trichotillomania could lead to the development of effective treatment strategies. This research project therefore hopes to discover more about Trichotillomania as it occurs in Australians. Specifically, this research project will explore what kinds of thoughts, beliefs, perceptions, and 'self-talk' individuals with chronic hairpulling experience before, during and after hairpulling episodes.

4. What will participation involve?

Eligibility:

You are eligible to take part in this research project if you:

- Are age 18 – 80 years old
- Engage in hairpulling that you find distressing and is **not** done only for cosmetic purposes
- Available and willing to take part in video- or audio-recorded interviews (conducted in English), lasting approximately 2 – 2.5 hours at Swinburne University's Hawthorn campus.

Procedures:

If you choose to participate in this study you will be asked to:

- Complete four questionnaires about hairpulling symptoms, obsessive-compulsive symptoms and beliefs, and quality of life. These questionnaires can be completed at a time and place of your convenience, and may take between 30 – 45 minutes to complete. Please find these four questionnaires attached to this Consent Information Statement and Consent Form, for you to complete if you agree to take part in this research.
- Take part in an assessment interview, which will ask you further questions about symptoms of Trichotillomania, and other psychological conditions. This assessment interview will be conducted by the Student Investigator, Miss Imogen Rehm, and may take between 1 – 1.5 hours. This interview will be video- or audio-recorded depending on your level of comfort. This interview will take place at Swinburne University's Hawthorn campus.
- Take part in an informal interview, in which you will have the opportunity to discuss your experiences with chronic hairpulling. It is also likely that you will be asked about the kinds of emotions, thoughts, beliefs and physical sensations that happen for you before, during and after hairpulling episodes. This interview will also be conducted by the Student Investigator, and may take approximately 1 hour. This interview will also be video- or audio-recorded, depending on your level of comfort. This interview will take place at Swinburne University's Hawthorn campus directly after the assessment interview.
- Should further information be required after completion of your interviews, you may be contacted further regarding this. If you do not wish to be contacted after your participation however, you may stipulate this on the Participant Consent Form (below).

5. What are the possible benefits of participating in this research?

Immediate benefits to you may include confirmation that your chronic hairpulling is due to a psychological condition called 'Trichotillomania', and being able to openly discuss your hairpulling experiences may be of similar benefit. Other immediate benefits to you may be the identification of symptoms indicative of other psychological conditions (e.g., depression, anxiety), which might not have otherwise been detected. If this occurs, this information will be

passed on *(if you consent)* to relevant mental health practitioners/services for appropriate management.

6. What are the possible risks of participating in this research?

Chronic hairpulling and the hair loss it causes can be a very embarrassing and distressing matter to talk about. The investigators of this research project are aware of this and will endeavour to minimise these risks. If you become upset during your participation, the investigators will stop interviewing and allow you to decide whether or not you wish to continue participating in the research project. After participating, if you remain distressed or are concerned about anything that occurred during your participation, the investigators will be able to arrange for appropriate support or counselling from relevant mental health practitioners/services.

7. Can I withdraw from participating in this research project?

Participation in this research project is voluntary, and you do not have to take part if you do not want to. If you decide to participate but later change your mind, you are free to withdraw from the project at any stage. Your choice to either participate or not participate will have no impact upon your future or current relationships with, or the quality of service provision provided by, Swinburne University or the Anxiety Recovery Centre of Victoria. Moreover, if you currently utilise services offered by the Anxiety Recovery Centre of Victoria and found out about this study through them, you do **not** need to inform them of your choice to either participate or not participate in this research project.

8. What will happen to information about me?

Any information obtained about you in connection with the research project that can identify you will remain confidential, and accessible *only* to the investigators as named above. Any such information will be disclosed *only with your consent*, except as required by law. All identifying information on records (hardcopy and electronic) obtained during your participation will be removed and replaced with a random code. In any form of publication/presentation, only the pooled group data will be used. If interview quotes are published/presented for illustrative purposes, **no identifying information or names** will be used in those quotes. Any information and data collected as part of this research will be securely stored and destroyed after five years.

9. Research output

The results of this research will be presented as part of the Student Investigator's Doctoral dissertation. Results may also be published in peer-reviewed journals or presented at national/international conferences.

10. Further information about the project – who to contact

For further information about the project and to arrange an appointment to participate in the research, please do not hesitate to contact either:

Dr Maja Nedeljkovic, Lecturer
Faculty of Life and Social Sciences, Swinburne University of Technology
mnedeljkovic@swin.edu.au, Tel: (03) 9214 4428

Miss Imogen Rehm, Student Investigator
Faculty of Life and Social Sciences, Swinburne University of Technology
irehm@swin.edu.au, Tel: (03) 9214 5553

11. Where can I go for extra support?

If you feel you would benefit from extra support after participating in this study, please do not hesitate to contact the Swinburne Psychology Clinic for low-cost counselling appointments: Swinburne University Hawthorn Campus, George Swinburne (GS) building, 34 Wakefield Street, Level 4. Tel: (03) 9214 8653.

If you are experiencing a crisis or need urgent help, urgently phone:

Lifeline 13 11 14

Suicide Helpline 1300 651 251

12. Concerns/complaints about the project – who to contact:

This project has been approved by or on behalf of Swinburne's Human Research Ethics Committee (SUHREC) in line with the *National Statement on Ethical Conduct in Human Research*. If you have any concerns or complaints about the conduct of this project, you can contact:

Research Ethics Officer, Swinburne Research (H68),
Swinburne University of Technology, P O Box 218, HAWTHORN VIC 3122.
Tel (03) 9214 5218 or +61 3 9214 5218 or resethics@swin.edu.au

SWINBURNE UNIVERSITY OF TECHNOLOGY

PARTICIPANT CONSENT FORM

Swinburne University of Technology

Project Title: A Qualitative Investigation of the Cognitions Experienced in Episodes of Chronic Hairpulling: Informing Cognitive-Behavioural Models of Trichotillomania

Principle Investigators:
Dr Maja Nedeljkovic (Lecturer, Faculty of Life and Social Sciences, Swinburne University of Technology)
Miss Imogen Rehm (Student Investigator, Faculty of Life and Social Sciences, Swinburne University of Technology)

Please circle either A or B below to inform the investigators of your decision whether or not to participate:

A. I consent to participate in the project named above. I have been provided a copy of the project consent information statement to which this consent form relates and any questions I have asked have been answered to my satisfaction.
   - *NOTE: If you have circled A please remember to bring this consent form and your completed questionnaires with you to your scheduled appointment with the investigators.*

B. I do not consent to participate in the project named above. I do not wish to be contacted further regarding this research project.
   - *NOTE: If you have circled B please send this form back to the investigators using the reply-paid envelope. This will ensure you receive no further contact from them.*

In relation to this project, please circle your response to the following*:*

- I agree to be interviewed by the researcher **Yes** **No**
- I agree to allow the interview to be recorded by electronic device **Yes** **No**
- I agree to make myself available for further information if required **Yes** **No**
- I agree to complete questionnaires asking me about psychological symptoms and conditions **Yes** **No**

I acknowledge that:

(a) my participation is voluntary and that I am free to withdraw from the project at any time without explanation;

(b) any identifiable information about me which is gathered in the course of and as the result of my participating in this project will be (i) collected and retained for the purpose of this project and (ii) accessed and analysed by the researcher(s) for the purpose of conducting this project;

(c) my anonymity is preserved and I will not be identified in publications or otherwise without my express written consent.

By signing this document I agree to participate in this project.

Name of Participant: ……

Signature & Date: ……

Appendix N

Ethics Approvals (Study 1, Chapter 6)

SUHREC Project 2011/256 Ethics Clearance for Project Modification

Kaye Goldenberg
Sent: Friday, 23 March 2012 10:03 AM
To: Rehm, Imogen [IREHM@groupwise.swin.edu.au]; Nedeljkovic, Maja [MNedeljkovic@groupwise.swin.edu.au]
Cc: Robyn Watson

To: Dr Maja Nedeljkovic, FLSS/Ms Imogen Rehm
CC: Ms Robyn Watson, Research Admin. Co-ordinator, FLSS

Dear Dr Nedeljkovic,

SUHREC Project 2011/256 A qualitative investigation of the cognitions experienced in episodes of chronic hairpulling: informing cognitive-behavioural models of Trichotillomania
Dr Maja Nedeljkovic, FLSS/Ms Imogen Rehm
Approved Duration: 17/11/2011 To 31/01/2015 [Adjusted]
Project Modification: March 2012

I refer to your request to modify the protocol by the addition of two questionnaires, initially received on 17 February 2012 via an annual report (hard copy). Clarification was sought regarding the proposed changes and your response was received on 28 February 2012. The documentation (annual report and subsequent response) were reviewed by a SUHREC delegate.

I am pleased to advise that, as submitted to date, the modified project/protocol may continue in line with standard ethics clearance conditions previously communicated and reprinted below.

Please contact me if you have any queries about on-going ethics clearance, citing the SUHREC project number. Copies of clearance emails should be retained as part of project record-keeping.

As before, best wishes for the project.

Regards
Kaye Goldenberg
for
Keith Wilkins
Secretary, SUHREC
****
Keith Wilkins
Research Ethics Officer
Swinburne Research (H68)
Swinburne University of Technology
P O Box 218
HAWTHORN VIC 3122

Tel +61 3 9214 5218
Fax +61 3 9214 5267

>>> Kaye Goldenberg 17/11/2011 1:55 PM >>>
To: Dr Maja Nedeljkovic, FLSS/Ms Imogen Rehm
[BC: Ms Imogen Rehm]
CC: Ms Robyn Watson, Research Admin. Co-ordinator, FLSS

Dear Dr Nedeljkovic,

SUHREC Project 2011/256 A qualitative investigation of the cognitions experienced in episodes of chronic hairpulling: informing cognitive-behavioural models of Trichotillomania
Dr Maja Nedeljkovic, FLSS/Ms Imogen Rehm
Approved Duration: 17/11/2011 To 31/01/2015 [Adjusted]

I refer to the ethical review of the above project protocol undertaken by Swinburne's Human Research Ethics Committee (SUHREC) at its meeting 08/2011 held 28 October 2011. Your response to the review, as emailed on 14 November 2011 with attachments, was put to a SUHREC delegate for consideration.

I am pleased to advise that, as submitted to date, the project has approval to proceed in line with standard on-going ethics clearance conditions here outlined.

- All human research activity undertaken under Swinburne auspices must conform to Swinburne and external regulatory standards, including the National Statement on Ethical Conduct in Human Research and with respect to secure data use, retention and disposal.

- The named Swinburne Chief Investigator/Supervisor remains responsible for any personnel appointed to or associated with the project being made aware of ethics clearance conditions, including research and consent procedures or instruments approved. Any change in chief investigator/supervisor requires timely notification and SUHREC endorsement.

- The above project has been approved as submitted for ethical review by or on behalf of SUHREC. Amendments to approved procedures or instruments ordinarily require prior ethical appraisal/ clearance. SUHREC must be notified immediately or as soon as possible thereafter of (a) any serious or unexpected adverse effects on participants and any redress measures; (b) proposed changes in protocols; and (c) unforeseen events which might affect continued ethical acceptability of the project.

- At a minimum, an annual report on the progress of the project is required as well as at the conclusion (or abandonment) of the project.

- A duly authorised external or internal audit of the project may be undertaken at any time.

Please contact the Research Ethics Office if you have any queries about on-going ethics clearance, citing the SUHREC project number. Please retain a copy of this clearance email as part of project record-keeping.

Best wishes for the project.

Yours sincerely
Kaye Goldenberg

for
Keith Wilkins
Secretary, SUHREC
****
Keith Wilkins
Research Ethics Officer
Swinburne Research (H68)
Swinburne University of Technology
P O Box 218
HAWTHORN VIC 3122
Tel +61 3 9214 5218
Fax +61 3 9214 5267

Appendix O

Participant Recruitment Advertisement (Studies 2 – 3, Chapter 7)

Anonymous Online Survey for Individuals with and without Trichotillomania (Compulsive Hairpulling): Research Participants Wanted!

For individuals with a poorly-understood psychological condition called Trichotillomania, hair-pulling is a compulsive behaviour in which hair is typically removed from the scalp, eyebrows, and eyelashes until noticeable hair loss results. Trichotillomania causes embarrassment, distress and disruption to many important areas of life.

Researchers at Swinburne University (Melbourne, Australia) are currently developing and evaluating a measure of thoughts and beliefs associated with Trichotillomania. It is hoped that their efforts will increase awareness of Trichotillomania in Australia, and that the final measure may be used internationally to generate insights into the condition that will facilitate the development of comprehensive, effective treatment strategies.

We are seeking individuals with and without Trichotillomania who are aged over 18 years to participate in this research. Participants will be asked to anonymously complete questionnaires online, which will take approximately 45 – 60 minutes to complete.

Please click on the link for further information and to be directed to the survey: http://www.psychsurveys.org/trichotillomania/beliefs

For more information, please do not hesitate to contact either:

Dr Maja Nedeljkovic, Principle Investigator, Ph: (03) 9214 4428, e-mail: mnedeljkovic@swin.edu.au
Miss Imogen Rehm, Student Investigator, Ph: (03) 9214 5553, e-mail: irehm@swin.edu.au

Appendix P

The Milwaukee Inventory for Styles of Trichotillomania-Adult Version (MIST-A; Flessner et al., 2008)

The MIST-A is a copyrighted instrument that cannot be reproduced in this thesis. For a copy of the MIST-A, please consult:

Flessner, C. A., Woods, D. W., Franklin, M. E., Cashin, S. E., Keuthen, N. J., Mansueto, C. S., . . . Wright, H. H. (2008). The Milwaukee inventory for subtypes of trichotillomania-adult version (MIST-A): Development of an instrument for the assessment of "focused" and "automatic" hair pulling. *Journal of Psychopathology and Behavioral Assessment, 30*(1), 20-30. doi:10.1007/s10862-007-9073-x

Appendix Q

Beliefs in Trichotillomania Scale (BiTS) Original 50-item Measure

Please select the number that best corresponds to your level of agreement with the following statements. There are no right or wrong answers, so try to answer according to what feels right to you.

1	2	3	4	5	6	7
Disagree Very Much	Disagree Moderately	Disagree a Little	Neither agree nor disagree	Agree a little	Agree moderately	Agree very much

1. I do not feel comfortable with who I am	1	2	3	4	5	6	7
2. I do not think I am normal, like everyone else	1	2	3	4	5	6	7
3. In times of change, I feel out of control	1	2	3	4	5	6	7
4. If I am unable to fix something so that it's perfect, I won't be able to stop thinking or feeling uncomfortable about it	1	2	3	4	5	6	7
5. I become increasingly uncomfortable the longer I am unable to complete something I may have been doing or working on	1	2	3	4	5	6	7
6. When I feel emotions like disappointment, frustration or anxiety I feel a strong sense of urgency to get rid of them	1	2	3	4	5	6	7
7. If I feel sad or down it means I am not a happy and contented person	1	2	3	4	5	6	7
8. I wish my stress, anxiety and problems would just go away	1	2	3	4	5	6	7

9. I should be able to cope with my difficulties on my own	1 2 3 4 5 6 7
10. I cannot cope with stress	1 2 3 4 5 6 7
11. I do not know how to deal with my problems	1 2 3 4 5 6 7
12. I should be able to influence the people around me	1 2 3 4 5 6 7
13. I have much to feel embarrassed or ashamed about	1 2 3 4 5 6 7
14. I do not like to think about my self-worth	1 2 3 4 5 6 7
15. If I cannot control something then there is no point in trying	1 2 3 4 5 6 7
16. I fear what would happen to me, or what I would do, if I experience emotions like anxiety, anger or sadness without immediate relief	1 2 3 4 5 6 7
17. The best coping strategies are those that require little effort or thought	1 2 3 4 5 6 7
18. When I want to do something I know I shouldn't do, I tend to persuade myself to do it anyway	1 2 3 4 5 6 7
19. I strive for perfection in everything that I do	1 2 3 4 5 6 7
20. I find it difficult to switch my attention from one task to another that's completely different	1 2 3 4 5 6 7
21. I must be in control of my emotions at all times	1 2 3 4 5 6 7
22. I do not want to deal with my problems	1 2 3 4 5 6 7
23. Being in control is very important to me	1 2 3 4 5 6 7
24. I always have a choice in determining my own behaviour, thoughts, and the way I feel	1 2 3 4 5 6 7
25. I think I am lacking or deficient in many positive	1 2 3 4 5 6 7

qualities

26. There really isn't anything I can point out that makes me feel proud of myself	1 2 3 4 5 6 7
27. Everything in my life should be predictable and run according to plan	1 2 3 4 5 6 7
28. I do not have any choice but to act upon my urges or impulses when they occur	1 2 3 4 5 6 7
29. Any imperfection (e.g., in my work or appearance) reflects very poorly on me	1 2 3 4 5 6 7
30. I am not good at talking about my emotions	1 2 3 4 5 6 7
31. A good coping strategy is one that helps me solve problems for the long-term	1 2 3 4 5 6 7
32. I do not think it's appropriate or helpful to express my emotions, or tell others how I feel	1 2 3 4 5 6 7
33. I feel accomplished when I am able to master a situation or behaviour that I thought I had little control over	1 2 3 4 5 6 7
34. When making decisions, I am often persuaded by immediate gratification over longer-term gains	1 2 3 4 5 6 7
35. I don't feel deserving of the care and concern of others	1 2 3 4 5 6 7
36. I find that fixing something so that it's perfect is a very cleansing, gratifying experience for me	1 2 3 4 5 6 7
37. I struggle to accept my emotions	1 2 3 4 5 6 7
38. I should not have to rely on others to help me cope with my emotions and stress	1 2 3 4 5 6 7

39. When I compare myself to others, I think I'm less worthy than they are	1	2	3	4	5	6	7
40. I think I experience negative emotions more intensely than others do	1	2	3	4	5	6	7
41. If I don't think that something will work or be successful I don't see the point in trying	1	2	3	4	5	6	7
42. I do not see anything wrong with having perfectionistic, exacting standards	1	2	3	4	5	6	7
43. Trying to resolve my problems will only cause me more stress and hurt	1	2	3	4	5	6	7
44. I have made many mistakes in my life that I should not have made	1	2	3	4	5	6	7
45. I prefer to ignore or forget about the things that are troubling me	1	2	3	4	5	6	7
46. I ought to have complete control and choice over my own behaviour and actions	1	2	3	4	5	6	7
47. I experience strong urges to fix anything that I perceive to be wrong, imperfect or not-quite-right	1	2	3	4	5	6	7
48. When I am unable to change or control something, it means I am a failure	1	2	3	4	5	6	7
49. I cannot stand to experience negative emotions like sadness, anxiety, guilt, or anger	1	2	3	4	5	6	7
50. I am never satisfied with 'good enough'	1	2	3	4	5	6	7

Negative Self-beliefs (NSB) items: 1, 2, 13, 14, 25, 26, 35, 39, 44
Control beliefs (CN) items: 3, 12, 15, 23, 24, 27, 28, 33, 46, 48
Perfectionistic Standards (PS) items: 4, 19, 29, 36, 42, 47, 50
Permission-Giving beliefs (PG) items: 5, 18, 20, 34, 41
Beliefs about Negative Emotions (NE) items: 6, 7, 8, 16, 21, 30, 32, 37, 40, 49
Control beliefs (CO) items: 9, 10, 11, 17, 22, 31, 38, 43, 45

Appendix R

Depression Anxiety Stress Scales 21 (DASS-21; Lovibond & Lovibond, 1995)

DASS21

Please read each statement and circle a number 0, 1, 2 or 3 which indicates how much the statement applied to you *over the past week*. There are no right or wrong answers. Do not spend too much time on any statement.

The rating scale is as follows:
0 Did not apply to me at all
1 Applied to me to some degree, or some of the time
2 Applied to me to a considerable degree, or a good part of time
3 Applied to me very much, or most of the time

1	I found it hard to wind down	0	1	2	3
2	I was aware of dryness of my mouth	0	1	2	3
3	I couldn't seem to experience any positive feeling at all	0	1	2	3
4	I experienced breathing difficulty (eg, excessively rapid breathing, breathlessness in the absence of physical exertion)	0	1	2	3
5	I found it difficult to work up the initiative to do things	0	1	2	3
6	I tended to over-react to situations	0	1	2	3
7	I experienced trembling (eg, in the hands)	0	1	2	3
8	I felt that I was using a lot of nervous energy	0	1	2	3
9	I was worried about situations in which I might panic and make a fool of myself	0	1	2	3
10	I felt that I had nothing to look forward to	0	1	2	3
11	I found myself getting agitated	0	1	2	3
12	I found it difficult to relax	0	1	2	3
13	I felt down-hearted and blue	0	1	2	3
14	I was intolerant of anything that kept me from getting on with what I was doing	0	1	2	3
15	I felt I was close to panic	0	1	2	3
16	I was unable to become enthusiastic about anything	0	1	2	3
17	I felt I wasn't worth much as a person	0	1	2	3
18	I felt that I was rather touchy	0	1	2	3
19	I was aware of the action of my heart in the absence of physical exertion (eg, sense of heart rate increase, heart missing a beat)	0	1	2	3
20	I felt scared without any good reason	0	1	2	3
21	I felt that life was meaningless	0	1	2	3

Appendix S

Urgency Premeditation Perseverance Sensation Seeking Impulsive Behavior Scale (UPPS; Whiteside & Lynam, 2001)

The UPPS is a copyrighted instrument that cannot be reproduced in this thesis. For a copy of the UPPS, please consult:

Whiteside, S. P. & Lynam, D. R. (2001). The five factor model and impulsivity: Using a structural model of personality to understand impulsivity. *Personality and Individual Differences, 30*, 669-689.

Appendix T

Acceptance and Action Questionnaire II (AAQ-II; Bond et al., 2011)

The AAQ-II is a copyrighted instrument that cannot be reproduced in this thesis. For a copy of the AAQ-II, please consult:

Bond, F. W., Hayes, S. C., Carpenter, K. M., Guenole, N., Orcutt, H. K., Waltz, T., & Zettle, R. D. (2011). Preliminary psychometric properties of the acceptance and action questionairre-II: A revised measure of psychological inflexibility and experiential avoidance. *Behavior Therapy, 42*, 676-688.

Appendix U

Rosenberg Self Esteem Scale (RSE; Rosenberg, 1965)

Below is a list of statements dealing with your general feelings about yourself. If you strongly agree, select **SA**. If you agree with the statement, select **A**. If you disagree, select **D**. If you strongly disagree, select **SD**.

1. I feel that I am a person of worth, at least on an equal plane with others	SA	A	D	SD
2. I feel that I have a number of good qualities	SA	A	D	SD
3. All in all, I am inclined to feel that I am a failure	SA	A	D	SD
4. I am able to do things as well as most other people	SA	A	D	SD
5. I feel I do not have much to be proud of	SA	A	D	SD
6. I take a positive attitude toward myself	SA	A	D	SD
7. On the whole, I am satisfied with myself	SA	A	D	SD
8. I wish I could have more respect for myself	SA	A	D	SD
9. I certainly feel useless at times	SA	A	D	SD
10. At times I think I am no good at all	SA	A	D	SD

Appendix V

Anxiety Control Questionnaire-Revised (ACQ-R; Brown, White, Forsyth & Barlow, 2004; Rapee, Craske, Brown & Barlow, 1996)

The ACQ-R is a copyrighted instrument that cannot be reproduced in this thesis. For a copy of the ACQ-R, please consult:

Brown, T. A., White, K. S., Forsyth, J. P., & Barlow, D. H. (2004). The structure of perceived emotional control: Psychometric properties of a revised anxiety control questionnaire. *Behavior Therapy, 35*, 75-99.

Appendix W

Difficulties in Emotion Regulation Scale (DERS; Gratz & Roemer, 2004)

Please indicate how often the following statements apply to you by writing the appropriate number from the scale below on the line beside each item.

1	2	3	4	5
Almost never (0-10%)	Sometimes (11-35%)	About half the time (36-65%)	Most of the time (66-90%)	Almost always (91-100%)

1. ____I am clear about my feelings.
2. ____I pay attention to how I feel.
3. ____I experience my emotions as overwhelming and out of control.
4. ____I have no idea how I am feeling.
5. ____I have difficulty making sense out of my feelings.
6. ____I am attentive to my feelings.
7. ____I know exactly how I am feeling.
8. ____I care about what I am feeling.
9. ____I am confused about how I feel.
10. ____When I'm upset, I acknowledge my emotions.
11. ____When I'm upset, I become angry with myself for feeling that way.
12. ____When I'm upset, I become embarrassed for feeling that way.
13. ____When I'm upset, I have difficulty getting work done.
14. ____When I'm upset, I become out of control.
15. ____When I'm upset, I believe that I will remain that way for a long time.
16. ____When I'm upset, I believe that I will end up feeling very depressed.
17. ____When I'm upset, I believe that my feelings are valid and important.
18. ____When I'm upset, I have difficulty focusing on other things.
19. ____When I'm upset, I feel out of control.
20. ____When I'm upset, I can still get things done.
21. ____When I'm upset, I feel ashamed at myself for feeling that way.
22. ____When I'm upset, I know that I can find a way to eventually feel better.
23. ____When I'm upset, I feel like I am weak.
24. ____When I'm upset, I feel like I can remain in control of my behaviors.
25. ____When I'm upset, I feel guilty for feeling that way.

26. ____When I'm upset, I have difficulty concentrating.
27. ____When I'm upset, I have difficulty controlling my behaviors.
28. ____When I'm upset, I believe there is nothing I can do to make myself feel better.
29. ____When I'm upset, I become irritated at myself for feeling that way.
30. ____When I'm upset, I start to feel very bad about myself.
31. ____When I'm upset, I believe that wallowing in it is all I can do.
32. ____When I'm upset, I lose control over my behavior.
33. ____When I'm upset, I have difficulty thinking about anything else.
34. ____When I'm upset, I take time to figure out what I'm really feeling.
35. ____When I'm upset, it takes me a long time to feel better.
36. ____When I'm upset, my emotions feel overwhelming.

Appendix X

Distress Tolerance Scale (DTS; Simons & Gaher, 2005)

The DTS is a copyrighted instrument that cannot be reproduced in this thesis. For a copy of the DTS, please consult:

Simons, J. S. & Gaher, R. M. (2005). The distress tolerance scale: Development and validation of a self-report measure. *Motivation and Emotion, 29*(2), 83-102. doi:10.1007/s11031-005-7955-3

Appendix Y

Online Consent Information Statement (Studies 2 – 3, Chapter 7)

PARTICIPANT CONSENT INFORMATION STATEMENT

Project Title: Development of a Measure of Beliefs in Trichotillomania

(Chronic Hairpulling)

Principle Investigator: Dr Maja Nedeljkovic (Swinburne University of Technology)
Student investigator: Miss Imogen Rehm (Swinburne University of Technology)
Associate Investigators: Dr Richard Moulding (Deakin University) and Dr Anna Thomas (Swinburne University of Technology)

This research project is investigating a psychological condition called Trichotillomania. Individuals with Trichotillomania compulsively remove hair from their scalp, eyebrows, eyelashes and other bodily areas. This repeated hairpulling (which is often experienced as uncontrollable) typically results in noticeable hair loss, which is embarrassing, distressing, and accompanied by attempts to hide the hair loss. Self-esteem, occupational and educational functioning, and social relationships can all be disrupted by Trichotillomania. Although Trichotillomania has traditionally been thought of as a rare disorder, recent evidence has found that this is not the case; it is now estimated that approximately 3% of the US population is affected.

While it is generally understood that negative emotions play a large role in triggering hairpulling 'episodes' in individuals with Trichotillomania, the role of thoughts and beliefs in this process remains relatively unknown. Building on their previous study that identified several types of thoughts and beliefs associated with Trichotillomania, the investigators of this new research project aim to develop and evaluate a psychological measure of these beliefs. It is anticipated that development of this measure will increase our understanding of Trichotillomania, and will ultimately assist clinicians and researchers to develop more comprehensive and effective treatments than is currently available for this condition.

In order to do this we are seeking individuals over the age of 18 who either **do** or **do not** engage in clinically significant hairpulling behaviours. That is, you do not need to have Trichotillomania to participate in this research.

This project is purely for the purpose of research and is not for profit. By clicking the *Start* button below, you are consenting to participate in this study. Your initial agreement to participate does not stop you from discontinuing participation and **you are free to withdraw at any time up to submitting the survey**. The submission of your questionnaire will be taken as consent for your data to be used in this study. **Your responses to the questionnaire will be anonymous and confidential**. Your responses will be stored on a password-protected account at www.psychsurveys.org allocated only to the study's investigators. You will not be required to provide any personally identifying information. The results of this study will form the basis

of Miss Imogen Rehm's PhD thesis, and may be presented at a conference or published in an academic journal. Only group data, and not the results of any particular individual will be presented.

The questionnaire will take approximately 60 minutes to complete. It is important that you complete the questions honestly; usually your first response is the most accurate and there is no need to spend a lot of time on each question.

If you choose to participate in this study, you will initially be asked to provide some basic general information, such as your gender, age, nationality, education history, employment, and marital status. This is for the purpose of describing the group of participants in this study. The survey is comprised of a set of questionnaires. Some will ask you about hairpulling behaviours and associated thoughts and beliefs. Other questionnaires inquire about symptoms of anxiety, depression, self-esteem, impulsivity and obsessive beliefs.

Although unlikely, completing surveys of this nature can be distressing for some people. If you experience distress and would like to discuss this with someone you can **contact LifeLine on 13 11 14 (Australia only)** or visit **http://www.suicide.org/international-suicide-hotlines.html (international)** for support services in your local area. Information and support specifically for Trichotillomania can also be obtained from the Anxiety Recovery Centre of Victoria in Australia (www.arcvic.org.au) or the Trichotillomania Learning Centre in the USA (www.trich.org). If you would like additional information on the current study, please contact Dr Maja Nedeljkovic (mnedeljkovic@swin.edu.au, tel: (03) 9214 4428) or Miss Imogen Rehm (irehm@swin.edu.au, tel: (03) 9214 5553).

If participating from outside of Australia, please be alert to any local restrictions covering participation in foreign research.

This project has been approved by or on behalf of Swinburne's Human Research Ethics Committee (SUHREC) and Deakin University Human Research Ethics in line with the *National Statement on Ethical Conduct in Human Research*. If you have any concerns or complaints about the conduct of this project, you can contact:

Research Ethics Officer, Swinburne Research (H68),
Swinburne University of Technology, P O Box 218, HAWTHORN VIC 3122.
Tel (03) 9214 5218 or +61 3 9214 5218 or resethics@swin.edu.au

AND/OR

The Manager, Research Integrity, Deakin University, 221 Burwood Highway, Burwood Victoria 3125, Telephone: 9251 7129, research-ethics@deakin.edu.au

Before clicking the *Start* button, please ensure that:
* You have read and understood the information above.
* You are 18 years or older, and **may or may not** engage in clinically significant hairpulling.

* You agree to participate in this study.
* You understand that you are free to withdraw your participation from this study at any time.
* You understand that consent is implied when you submit a completed survey.

Appendix Z

Ethics Approvals (Studies 2 – 3, Chapter 7)

SUHREC Project 2013/146 Ethics Clearance

Keith Wilkins
Sent: Thursday, 18 July 2013 2:53 PM
To: Maja Nedeljkovic; Imogen Rehm
Cc: RES Ethics; FLSS Research

To: Dr Maja Nedeljkovic/Ms Imogen Rehm

Dear Maja and Imogen

SUHREC Project 2013/146 The qualitative development of a measure of cognitions and beliefs in Trichotillomania
Dr Maja Nedeljkovic, FLSS; Miss Imogen Rehm, Dr Anna Thomas, Dr Richard Moulding
Approved Duration: 18/07/2013 To 31/03/2015 [Adjusted]

I refer to the ethical review of the above project protocol by Swinburne's Human Research Ethics Committee (SUHREC). Your responses to the review, as per your email of 10 July 2013 with attachment, were put to a SUHREC delegate for consideration and feedback sent to you. I acknowledge receipt of your email of 16 July 2013 accepting the feedback as regards the finalised consent instrument.

I am pleased to advise that, as submitted to date, the project may commence in line with standard on-going ethics clearance conditions here outlined.

- All human research activity undertaken under Swinburne auspices must conform to Swinburne and external regulatory standards, including the *National Statement on Ethical Conduct in Human Research* and with respect to secure data use, retention and disposal.

- The named Swinburne Chief Investigator/Supervisor remains responsible for any personnel appointed to or associated with the project being made aware of ethics clearance conditions, including research and consent procedures or instruments approved. Any change in chief investigator/supervisor requires timely notification and SUHREC endorsement.

- The above project has been approved as submitted for ethical review by or on behalf of SUHREC. Amendments to approved procedures or instruments ordinarily require prior ethical appraisal/ clearance. SUHREC must be notified immediately or as soon as possible thereafter of (a) any serious or unexpected adverse effects on participants and any redress measures; (b) proposed changes in protocols; and (c) unforeseen events which might affect continued ethical acceptability of the project.

- At a minimum, an annual report on the progress of the project is required as well as at the conclusion (or abandonment) of the project.

- A duly authorised external or internal audit of the project may be undertaken at any time.

Please contact the Research Ethics Office if you have any queries about on-going ethics clearance, citing the SUHREC project number. Copies of clearance emails should be retained as part of project record-keeping.

Best wishes for the project.

Yours sincerely
Keith

Keith Wilkins
Secretary, SUHREC & Research Ethics Officer
Swinburne Research (H68)
Swinburne University of Technology
P O Box 218
HAWTHORN VIC 3122
Tel +61 3 9214 5218
Fax +61 3 9214 5267

Human Research Ethics

Deakin Research Integrity
70 Elgar Road Burwood Victoria
Postal: 221 Burwood Highway
Burwood Victoria 3125 Australia
Telephone 03 9251 7123 Facsimile 03 9244 6581
research-ethics@deakin.edu.au

Memorandum

To: Dr Richard Moulding
School of Psychology

B

cc:

From: Deakin University Human Research Ethics Committee (DUHREC)

Date: 26 May, 2014

Subject: 2014-118
The qualitative development of a measure of cognitions and beliefs in trichotillomania

Please quote this project number in all future communications

Approval for this project was granted by the Deakin University Human Research Ethics Committee Executive on 26/05/2014.

Approval has been given for Dr Richard Moulding, School of Psychology, to undertake this project for four years from 26/05/2014.

The approval given by the Deakin University Human Research Ethics Committee is given only for the project and for the period as stated in the approval. It is your responsibility to contact the Human Research Ethics Unit immediately should any of the following occur:

- Serious or unexpected adverse effects on the participants
- Any proposed changes in the protocol, including extensions of time.
- Any events which might affect the continuing ethical acceptability of the project.
- The project is discontinued before the expected date of completion.
- Modifications are requested by other HRECs.

In addition you will be required to report on the progress of your project at least once every year and at the conclusion of the project. Failure to report as required will result in suspension of your approval to proceed with the project.

DUHREC may need to audit this project as part of the requirements for monitoring set out in the National Statement on Ethical Conduct in Human Research (2007).

Human Research Ethics Unit
research-ethics@deakin.edu.au
Telephone: 03 9251 7123

Appendix AA

Beliefs in Trichotillomania Scale (BiTS) Final 13-item Measure

Please select the number that best corresponds to your level of agreement with the following statements. There are no right or wrong answers, so try to answer according to what feels right to you.

1	2	3	4	5	6	7
Disagree Very Much	Disagree Moderately	Disagree a little	Neither agree nor disagree	Agree a little	Agree moderately	Agree very much

1. I do not feel comfortable with who I am	1	2	3	4	5	6	7
2. If I am unable to fix something so that it's perfect I won't be able to stop thinking or feeling uncomfortable about it	1	2	3	4	5	6	7
3. I become increasingly uncomfortable the longer I am unable to complete something I may have been doing or working on	1	2	3	4	5	6	7
4. I have much to feel embarrassed or ashamed about	1	2	3	4	5	6	7
5. I do not like to think about my self-worth	1	2	3	4	5	6	7
6. I am not good at talking about my emotions	1	2	3	4	5	6	7
7. I think I am lacking or deficient in many positive qualities	1	2	3	4	5	6	7
8. I do not think it's appropriate or helpful to express my emotions, or tell others how I feel	1	2	3	4	5	6	7
9. I find that fixing something so that it's perfect is a very cleansing, gratifying experience for me	1	2	3	4	5	6	7
10. Trying to resolve my problems will only cause me more stress and hurt	1	2	3	4	5	6	7

11. When I compare myself to others I think I'm less worthy than they are	1	2	3	4	5	6	7
12. I prefer to ignore or forget about the things that are troubling me	1	2	3	4	5	6	7
13. I experience strong urges to fix anything that I perceive to be wrong, imperfect or not quite right	1	2	3	4	5	6	7

Subscales:
Negative Self-Beliefs (NSB) = items 1, 4, 5, 7, 11
Perfectionism/Control (PC) = items 2, 3, 9, 13
Emotional Avoidance (EA) = items 6, 8, 10, 12

Appendix BB

Final Factor Pattern Matrix of the 13-item BiTS including Secondary Factor Loadings

Table BB1

Final Factor Pattern Matrix for 13-item BiTS including Secondary Factor Loadings: Principal Axis Factoring with Promax Rotation (n = 343)

Item	BiTS-NSB	BiTS-PC	BiTS-EA
5. I do not like to think about my self-worth	**0.92**	-0.08	-0.03
1. I do not feel comfortable with who I am	**0.86**	0.02	-0.12
4. I have much to feel embarrassed or ashamed about	**0.85**	-0.01	-0.01
7. I think I am lacking or deficient in many positive qualities	**0.68**	-0.01	-.21
11. When I compare myself to others I think I'm less worthy than they are	**0.67**	0.11	0.07
13. I experience strong urges to fix anything that I perceive to be wrong, imperfect or not-quite-right	-0.06	**0.79**	0.01
2. If I am unable to fix something so that it's perfect, I won't be able to stop thinking about it	0.05	**0.79**	0.02
3. I become increasingly uncomfortable the longer I am unable to complete something I may have been working on	0.09	**0.74**	-0.08
9. I find that fixing something so that it's perfect is a very cleansing, gratifying experience for me	-0.07	**0.73**	0.03
8. I do not think it's appropriate or helpful to express my emotions or tell others how I feel	-0.09	0.00	**0.81**
6. I am not good at talking about my emotions	-0.02	-0.09	**0.75**
12. I prefer to ignore or forget the things that are troubling me	-.06	0.07	**0.54**
10. Trying to resolve my problems will only cause me more stress and hurt	0.21	0.07	**0.49**
Eigenvalue	5.84	1.77	1.25
% of variance	44.49	13.65	9.59

Note. BiTS = Beliefs in Trichotillomania Scale; NSB = Negative Self-Beliefs; PC = Perfectionism/Control; EA = Emotional Avoidance. Loadings highlighted in bold indicate the factor on which the item was placed for the final measure. There were no double-loading items across factors.

Appendix CC

Inter-correlations Between BiTS Subscale and Total Scores Separated for HP and NP Participants (cf. Study 2, Chapter 7)

Table CC1

Inter-Correlations Between BiTS Subscale Scores According to Group

	HP participants (*n* = 194)				**NP participants (*n* = 149)**			
	1.	**2.**	**3.**	**4.**	**1.**	**2.**	**3.**	**4.**
1. BiTS-NSB	1				1			
2. BiTS-PC	.29*	1			.49*	1		
3. BiTS-EA	.45*	.21*	1		.64*	.38*	1	
4. BiTS total	.85*	.62*	.73*	1	.90*	.74*	.81*	1

Note. BiTS = Beliefs in Trichotillomania Scale; NSB = Negative Self-Beliefs; PC = Perfectionism/Control; EA = Emotional Avoidance.
*$p < .01$.

As shown in Table BB1, BiTS subscale inter-correlations when separated by group are still supportive of the scales internal consistency. There does appear to be somewhat greater separation between subscale correlations among HP participants, however, which suggests these constructs may feature less conceptual overlap for participants reporting non-cosmetic hairpulling behaviours than for participants who do not experience such symptoms. It should also be noted that BiTS-PC subscale scores were normally distributed for each group separately, whereas this data required square root transformation to restore normality for the pooled sample in order to perform Pearson's correlations (cf. Table 7.6, Chapter 7).

Appendix DD

Inter-correlations Between BiTS Subscale and Total Scores Separated for HP and NP Participants (Study 3, Chapter 7)

Table DD1

Pearson's Inter-Correlations Between BiTS Subscale Scores According to Group

	TTM (*n* = 193)				**Non-Clinical (*n* = 136)**			
	1.	**2.**	**3.**	**4.**	**1.**	**2.**	**3.**	**4.**
1. BiTS-NSB	1				1			
2. BiTS-PC	.34*	1			.53*	1		
3. BiTS-EA	.52*	.42*	1		.69*	.37*	1	
4. BiTS total	.84*	.71*	.80*	1	.92*	.75*	.81*	1

Note. BiTS = Beliefs in Trichotillomania Scale; NSB = Negative Self-Beliefs; PC = Perfectionism/Control; EA = Emotional Avoidance.

*$p < .01$.

As shown in Table DD1, BiTS subscale inter-correlations when separated by group are still supportive of the scales internal consistency. There does appear to be somewhat greater separation between subscale correlations among HP participants, however, which suggests these constructs may feature less conceptual overlap for participants reporting non-cosmetic hairpulling behaviours than for participants who do not experience such symptoms.

Appendix EE

Participant Recruitment Advertisement (TTM group) (Study 4, Chapter 8)

Research Participants Wanted!

Do you pull out your hair to the point of causing unintended hair loss?

Do you find your hair pulling difficult to control?

Does your hair pulling interfere with your life or cause you emotional distress?

Psychological researchers at Swinburne University (Melbourne, Australia) are currently developing a measure of thoughts and beliefs associated with **Trichotillomania** (aka **Hair Pulling Disorder**). It is hoped that the final measure can be used across Australia and internationally to improve our understanding of this disorder so we can develop more comprehensive, effective, and targeted treatments.

If you think you might have this problem and are aged 18 or older, we need your help!

In order to help us develop this measure you will be required to:

1. Participate in a 30-minute interview about your hair pulling with student investigator, Imogen Rehm. Interviews can be conducted via Skype for inter-state and international participants
2. Complete a series of questionnaires about hair pulling, related thoughts and feelings, and other psychological symptoms

If you think you can participate in this research or would like more information, please do not hesitate to contact either:

- Dr Maja Nedeljkovic, Principle Investigator, Ph: (03) 9214 4428, e-mail: mnedeljkovic@swin.edu.au
- Imogen Rehm, Student Investigator, Ph: (03) 9214 5553, e-mail: irehm@swin.edu.au

Thank you

Appendix FF

Participant Recruitment Advertisement (Control group) (Study 4, Chapter 8)

Research Participants Wanted!

Psychological researchers at Swinburne University would like your help to improve our understanding of a little-known but highly distressing condition called **Trichotillomania** (aka **Hair Pulling Disorder**).

For individuals with this psychological condition, hair pulling is a compulsive behaviour. Hair is typically removed from the scalp, eyebrows, and eyelashes until noticeable hair loss results. Trichotillomania causes embarrassment and disruption to many important areas of life.

This is why were are developing a measure of the kinds of thoughts and beliefs associated with Trichotillomania – ultimately, to help us develop more comprehensive, effective, and targeted treatments.

*But to do this, we need to know if people **WITHOUT** this condition respond differently to our measure than people who do have Trichotillomania*.

Your participation in this research would be greatly appreciated, provided that you:

1. Don't have any problems with compulsive hair pulling
2. Don't think have any other **current** psychological conditions (e.g., anxiety, depression)
3. Are over the age of 18
4. Can participate in a 30-minute psychological assessment interview at Swinburne University with student investigators Imogen Rehm and/or Tanya Arabatzoudis, and
5. Can complete a series of questionnaires about hair pulling, related thoughts and feelings, and other psychological symptoms

You will be compensated for your time with a $20 Coles-Myer gift voucher.

If you think you can participate in this research or would like more information, please don't hesitate to contact either:

- Dr Maja Nedeljkovic, Principle Investigator, Ph: (03) 9214 4428, e-mail: mnedeljkovic@swin.edu.au
- Imogen Rehm, Student Investigator, Ph: (03) 9214 5553, e-mail: irehm@swin.edu.au

Thank you.

Appendix GG

Clinical Characteristics of Participants with TTM Symptoms Meeting Subthreshold or Full *DSM-5* Criteria (Study 4, Chapter 8)

"Subthreshold TTM" participants included one male and three females. All participants with subthreshold TTM endorsed criterion A of *DSM-5* criteria within the six months prior to assessment: "Recurrent pulling out of one's hair, causing hair loss" (American Psychiatric Association, 2013, p. 251). All four participants denied that their hairpulling was for cosmetic or normal grooming purposes. One participant (female) endorsed criterion B for repeated attempts to decrease or stop hairpulling within the six months prior to assessment. All four participants did *not* endorse criteria C for clinically significant distress or functional impairment attributable to hairpulling within the six months prior to assessment. All four participants' hairpulling was not attributable to another medical condition (criterion D) or better explained by another mental disorder (criterion E). As such, the four subthreshold participants' hairpulling behaviours met at least three of the five *DSM-5* criteria for TTM.

Three of the four subthreshold TTM participants reported that their hairpulling had been diagnosed as TTM by a healthcare professional at some stage in their lifetime. Of those, two participants had sought psychological treatment within the previous three years, and had benefitted from it such that their symptoms no longer met full diagnostic criteria (i.e., their symptoms were in remission). The participant who had been diagnosed but did not receive treatment reported that she participated in online support groups for TTM. The one participant (male) who had not sought diagnosis or treatment for his symptoms reported that he had pulled hair from his eyebrows and facial hair daily in the 12 months since symptom onset.

Table GG1

Descriptive Statistics for Participants whose Hairpulling Symptoms Met Subthreshold or Full DSM-5 *Criteria for TTM*

	Subthreshold (*n* = 4)		**TTM (*n* = 16)**	
	M	*SD* / range	*M*	*SD* / range
Age	28.75	7.89	28.63	6.31
Age at symptom onset	14.75	2.06	11.63	3.70
MGHHPS	11.00	6.78	16.13	5.46
MIST-A Automatic	29.00	4.69	25.69	8.50
MIST-A Focused	42.00	12.11	52.81	14.20
DASS-D	6.50	5.45	5.56	3.92
DASS-A	5.50	6.14	6.00	5.90
Longest number of days pull-free[a]	282.75	349.96	42.25	64.45
Number of hairpulling sites[b]	1.50	1 – 2	3.56	1 – 6
Perceived distress caused by TTM[a, c, d]	1.50	1 – 2	4.00	2 – 6
Perceived functional impact caused by TTM[a, c, d]	1.50	1 – 2	2.81	0 – 5

Note. [a] Previous 6 months. [b] Lifetime. [c] Refers to *DSM-5* criterion C (APA, 2013). [d] Scale range: 0 = no distress/impact – 6 = extremely severe distress/impact.

As shown in Table GG1, subthreshold TTM participants reported a mean MGHHPS score of 11, suggesting mild symptom severity. They appeared to endorse equivalent levels of automatic hairpulling (MIST-A) as was reported by participants meeting full diagnostic criteria; however, their focused hairpulling levels appeared much lower by comparison. Subthreshold TTM participants reported fewer lifetime hairpulling sites and a greater number of pull-free days in the previous six months than did participants meeting full diagnostic criteria.

Appendix HH

Diagnostic Interview for Trichotillomania (DIT; Rehm & Nedeljkovic, 2015, cf. Study 4, Chapter 8)

Hairpulling History:

1. Have you ever, in your lifetime, pulled out hair that resulted in unintended (i.e., non-cosmetic) hair loss? Y / N

   **** If the answer is NO, end the interview ****

2. How old were you when you first began pulling out hair that resulted in unintended (i.e., non-cosmetic) hair loss?_____
3. At this age, where on your body did you begin pulling hair from?

   _____

4. In your lifetime, have you ever pulled hair from anywhere else on your body? *Check all sites that apply as well as the age at which hairpulling commenced at that site:*

Hairpulling site	Age of symptom onset
Scalp:	
Eyebrows:	
Eyelashes:	
Legs:	
Arms:	
Pubic:	
Beard:	
Chest:	
Abdomen:	
Other:	
Other:	

5. Since you began hair pulling at age _____ (*age of onset from qu.1*), what is the longest amount of time, in days/weeks/months, that you have gone without pulling any hair from these sites?

   Check all sites that apply as well as estimated duration without pulling:

Hairpulling site	Estimated duration without pulling
Scalp:	
Eyebrows:	
Eyelashes:	
Legs:	
Arms:	
Pubic:	
Beard:	
Chest:	
Abdomen:	
Other:	
Other:	

6. Have you ever been diagnosed with trichotillomania (hair pulling disorder?)

   If YES, by whom and when?

   Check the relevant diagnostic source:

Diagnostic source	Year of diagnosis
General Practitioner:	
Psychiatrist:	
Psychologist:	
Social Worker:	
Dermatologist:	
Other medical doctor:	
Other mental health practitioner:	
In a research trial: Record details:	
Self: by information in a book Record title:	
Self: by information on the internet Record resource:	
Other:	

7. Have you ever been treated for trichotillomania (hair pulling disorder?)
   If YES, by whom; with what treatment/s; for how long?

   Check treatment options:

Treatment provider	Treatment method	Treatment duration
General Practitioner:		
Psychiatrist:		
Psychologist:		
Social Worker:		
Dermatologist:		
Other medical doctor:		
Other mental health practitioner:		
Other:		

   Record details of participant's subjective view of treatment effectiveness:

   _____

   Check the participant's subjective rating of global treatment effectiveness for their most recent treatment episode:

   _____0 = made symptoms worse

   _____1 = no effect

   _____2 = slight or transient effect

   _____3 = mild effect

   _____4 = moderately successful effect

   _____5 = highly successful effect

   _____6 = extremely successful effect

Current Hairpulling Symptoms:

8. *(DSM-5 CRITERIA A)*

   Over the past 6 months, have you pulled hair that has resulted in unintended (i.e., non-cosmetic) hair loss? Y / N

   Note for participant: Hair loss includes incurring sites of alopecia (balding) or loss of hair volume (thinning)

   **** If the answer is NO, end the interview ****

   Check all sites that apply:

Hairpulling site
Scalp:
Eyebrows:
Eyelashes:
Legs:
Arms:
Pubic:
Beard:
Chest:
Abdomen:
Other:
Other:

9. *(DSM-5 CRITERIA B)*

   Over the past 6 months, have you repeatedly tried to decrease or stop pulling hair from 1 or more of these sites? Y / N

   **** If the answer is NO, end the interview ****

   Check all sites that apply and the estimated number of attempts at trying to decrease/stop pulling from the site:

Hairpulling site	Number of attempts to decrease/stop
Scalp:	
Eyebrows:	
Eyelashes:	
Legs:	

Arms:	
Pubic:	
Beard:	
Chest:	
Abdomen:	
Other:	
Other:	

10. Over the past 6 months, what is the longest amount of time, in days, that you have gone without pulling any hair from these sites?
    Check all sites that apply as well as estimated duration without pulling:

Hairpulling site	Estimated duration without pulling
Scalp:	
Eyebrows:	
Eyelashes:	
Legs:	
Arms:	
Pubic:	
Beard:	
Chest:	
Abdomen:	
Other:	
Other:	

11. Considering the past 6 months, on average, how many minutes each day have you spent pulling hair from these sites?
    Check all sites that apply as well as estimated duration spent pulling:

Hairpulling site	Estimated time spent pulling per day
Scalp:	
Eyebrows:	
Eyelashes:	
Legs:	
Arms:	

Pubic:	
Beard:	
Chest:	
Abdomen:	
Other:	
Other:	

12. Considering the past 6 months, on average, how many minutes each day have you spent thinking about pulling hair from these sites?
    Note for participant: Thinking about hair pulling includes thoughts about wanting to pull, thoughts about wanting to restrain from pulling, and thoughts about the consequences of pulling.
    Check all sites that apply as well as estimated duration spent thinking about hairpulling:

Hairpulling site	Estimated time spent thinking per day
Scalp:	
Eyebrows:	
Eyelashes:	
Legs:	
Arms:	
Pubic:	
Beard:	
Chest:	
Abdomen:	
Other:	
Other:	

13. *(DSM-5 CRITERIA C – FUNCTIONAL IMPACT)*
    Considering the past 6 months, has your hair pulling interfered with your normal routines, your work or school, your social activities, or your relationships?
    Record details:
    _____

Check the participant's subjective rating of global functional impact:

_____0 = no impact

_____1 = slight or transient impact

_____2 = mild impact

_____3 = moderate impact

_____4 = moderate-severe impact

_____5 = severe impact

_____6 = extremely severe impact

14. *(DSM-5 CRITERIA C – DISTRESS)*

Considering the past 6 months, has your hair pulling caused you significant distress?

Note to participant: This includes anxiety, sadness, embarrassment, etc.

Record details:

_____

Check the participant's subjective rating of hairpulling-specific distress:

_____0 = no distress

_____1 = slight or transient distress

_____2 = mild distress

_____3 = moderate distress

_____4 = moderate-severe distress

_____5 = severe distress

_____6 = extremely severe distress

*** * If a rating of less than 3 (moderate) is achieved on both qu's 10 and 11, end the interview ****

15. *(DSM-5 CRITERIA D)*

Considering the past 6 months, has your hair pulling been the direct result of a medical or dermatological condition? (e.g., pulling hair to relieve irritated skin as a result of eczema?)

If YES, check the sites this applied to:

Hairpulling site
Scalp:
Eyebrows:

Eyelashes:
Legs:
Arms:
Pubic:
Beard:
Chest:
Abdomen:
Other:
Other:

**** If a medical condition has caused hairpulling for ALL pulling sites in the last 3 months, end the interview ****

16. *(DSM-5 CRITERIA E – PSYCHOSIS/SUBTANCE ABUSE)*
    Has your hair pulling in the past 6 months ONLY been in response to beliefs that insects/bugs were crawling under the skin or any other unusual tactile perceptions/sensations?
    Y / N
    If YES assess for history of substance abuse and/or psychosis
    Record details:
    _____

**** If the answer is YES, cannot diagnose with TTM ****

17. *(DSM-5 CRITERIA E – BDD)*
    Has your hair pulling in the past 6 months ONLY been in response to beliefs that your hair is ugly or abnormal? Y / N
    Note to participant: Is the intention to remove ugly/abnormal hair in order to remove a 'defect' that you believe is the primary cause of poor body-image or self-esteem?
    Record details:
    _____

**** If the answer is YES, cannot diagnose with TTM ****

Appendix II

Participant Information and Consent Form (TTM group) (Study 4, Chapter 8)

PARTICIPANT CONSENT INFORMATION STATEMENT AND CONSENT FORM

Swinburne University of Technology

Project Title:
The Qualitative Development of a Measure of Cognitions and Beliefs in Trichotillomania – Clinical Validation

Principle Investigator:
Dr Maja Nedeljkovic (Senior Lecturer, Faculty of Health, Arts and Design, Swinburne University of Technology)
Student Investigator:
Miss Imogen Rehm (Student Investigator, Faculty of Health, Arts and Design, Swinburne University of Technology)
Miss Tanya Arabatzoudis (Student Investigator, Faculty of Health, Arts and Design, Swinburne University of Technology)

13. Introduction

You are invited to take part in this research project investigating Trichotillomania (chronic hairpulling). You have been invited because you believe you may meet current diagnostic criteria for this psychological disorder.

This Consent Information Statement provides you with detailed information on the research project. It explains what participation in this research project will involve, in order to help you decide if you would like to take part. This Consent Information Statement is for you to keep.

14. Project and researcher interests

The results of this research project will be used by Student Investigator, Miss Imogen Rehm, in partial completion of her Doctor of Philosophy (Clinical Psychology) and by Miss Tanya Arabatzoudis, in partial completion of her Postgraduate Diploma of Psychology.

15. What is this project about and what is its purpose?

This research project will investigate a psychological condition called Trichotillomania. Individuals with Trichotillomania repeatedly and compulsively remove hair from their scalp, eyebrows, eyelashes and other bodily areas. This repeated hairpulling (which is often experienced as uncontrollable) typically results in noticeable hair loss, which is embarrassing, distressing, and accompanied by attempts to 'hide' the hair loss. Self-esteem, occupational and educational functioning, and social relationships can all be disrupted by Trichotillomania.

While it is generally understood that negative emotions play a large role in triggering hairpulling 'episodes' in individuals with Trichotillomania, the role of thoughts and beliefs in this process remains unknown. Building on their previous study that identified several types of thoughts and beliefs associated with Trichotillomania, the investigators in this new research project aim to develop and evaluate a psychological measure of these beliefs. In this study, the measure will be validated among individuals who meet current diagnostic criteria for Trichotillomania, and among individuals without a current diagnosable psychological disorder.

It is anticipated that development of this measure will increase our understanding of Trichotillomania, and will ultimately assist clinicians and researchers to develop more comprehensive and effective treatments.

16. What will participation involve?

Eligibility:

You are eligible to take part in this research project if you:

- Are age 18 – 80 years old
- Engage in hairpulling that you find distressing and is **not** done only for cosmetic purposes
- Are available and willing to complete approximately 90 minutes of assessment (see 'Procedures', below)

If participating from outside of Australia, please be alert to any local restrictions covering participation in foreign research.

Procedures:

If you choose to participate in this study you will be asked to:

- Attend a 30-minute diagnostic interview with Student Investigator, Imogen Rehm, at Swinburne University, Hawthorn campus. Interviews via teleconferencing software, Skype, can also be arranged for inter-state and international participants. You will be asked about your symptoms of hairpulling in order to determine that you meet criteria for a diagnosis of Trichotillomania. You will also be asked about symptoms of other common psychological disorders (e.g., depression, anxiety).
- You will also be required to complete a battery of self-report psychological surveys, estimated to take 60 minutes to complete. This can be completed at a time and place of your convenience. These surveys will ask you about:
    - Hairpulling symptoms and associated thoughts/beliefs (including the measure being validated in this study)
    - Depression and anxiety symptoms
    - Perfectionism, impulsivity, and self-esteem
- Should further information be required after completion of your diagnostic interview and surveys, you may be contacted regarding this. If you do not wish to be contacted after your participation, however, you may stipulate this on the 'Participant Consent Form' (below).

17. What are the possible benefits of participating in this research?

Immediate benefits to you may include confirmation that your chronic hairpulling is due to a psychological condition called 'Trichotillomania'. Other immediate benefits to you may be the identification of symptoms indicative of other psychological conditions (e.g., depression, anxiety), which might not have otherwise been detected. If this occurs, this information will be passed on (if you consent) to relevant mental health practitioners/services for appropriate management.

18. What are the possible risks of participating in this research?

Chronic hairpulling and the hair loss it causes can be a very embarrassing matter to talk about. The investigators of this research project are aware of this and will endeavour to minimise these risks. If you become upset during your participation, the investigators will stop interviewing and allow you to decide whether or not you wish to continue participating in the research project.

After participating, if you remain distressed or are concerned about anything that occurred during your participation, the investigators will be able to help you seek appropriate support or counselling from relevant mental health services.

19. Can I withdraw from participating in this research project?

Participation in this research project is voluntary, and you do not have to take part if you do not want to. If you decide to participate but later change your mind, you are free to withdraw from the project at any stage. Your choice to either participate or not participate will have no impact upon your future or current relationships with, or the quality of service provision provided by, Swinburne University.

20. What will happen to information about me?

Any information obtained about you in connection with the research project that can identify you will remain confidential, and accessible *only* to the investigators as named above. Any such information will be disclosed *only with your consent*, except as required by law. All identifying information on records (hardcopy and electronic) obtained during your participation will be removed and replaced with a random code. In any form of publication/presentation, only the pooled group data will be used. Any information and data collected as part of this research will be securely stored and destroyed after five years.

21. Research output

The results of this research will be presented as part of the Student Investigators' doctoral and postgraduate diploma dissertations. Results may also be published in peer-reviewed journals or presented at national/international conferences. Data obtained for this research study may also be utilised in future, related studies.

22. Further information about the project – who to contact

For further information about the project and to arrange an appointment to participate in the research, please do not hesitate to contact either:

Dr Maja Nedeljkovic, Senior Lecturer
Faculty of Life and Social Sciences, Swinburne University of Technology
mnedeljkovic@swin.edu.au, Tel: (03) 9214 4428

Miss Imogen Rehm, Student Investigator
Faculty of Life and Social Sciences, Swinburne University of Technology
irehm@swin.edu.au, Tel: (03) 9214 5553

23. Where can I go for extra support?

If you would like extra support after participating in this study, please do not hesitate to contact the Swinburne Psychology Clinic for low-cost counselling appointments: Swinburne University Hawthorn Campus, George Swinburne (GS) building, 34 Wakefield Street, Level 4. Tel: (03) 9214 8653.

Information and support specifically for Trichotillomania can be obtained from the Anxiety Recovery Centre of Victoria in Australia (www.arcvic.org.au) or the Trichotillomania Learning Centre in the USA (www.trich.org).

If you are experiencing a crisis or need urgent help, urgently phone:

Lifeline 13 11 14 (Australia only)

Suicide Helpline 1300 651 251 (Australia only)

Or visit **http://www.suicide.org/international-suicide-hotlines.html (international)**

24. Concerns/complaints about the project – who to contact:

This project has been approved by or on behalf of Swinburne's Human Research Ethics Committee (SUHREC) in line with the *National Statement on Ethical Conduct in Human Research*. If you have any concerns or complaints about the conduct of this project, you can contact:

Research Ethics Officer, Swinburne Research (H68),
Swinburne University of Technology, P O Box 218, HAWTHORN VIC 3122.
Tel (03) 9214 5218 or +61 3 9214 5218 or resethics@swin.edu.au

PARTICIPANT CONSENT FORM

Swinburne University of Technology

Project Title: *The Qualitative Development of a Measure of Cognitions and Beliefs in Trichotillomania – Clinical Validation*

Principle Investigators:
Dr Maja Nedeljkovic (Senior Lecturer, Faculty of Health, Arts and Design, Swinburne University of Technology)
Miss Imogen Rehm (Student Investigator, Faculty of Health, Arts and Design, Swinburne University of Technology)
Miss Tanya Arabatzoudis (Student Investigator, Faculty of Health, Arts and Design, Swinburne University of Technology)

Please circle either A or B below to inform the investigators of your decision whether or not to participate:

C. I consent to participate in the project named above. I have been provided a copy of the project consent information statement to which this consent form relates and any questions I have asked have been answered to my satisfaction.

D. I do not consent to participate in the project named above. I do not wish to be contacted further regarding this research project.

In relation to this project, please circle your response to the following*:*

- I agree to be interviewed by the researcher **Yes** **No**
- I agree to make myself available for further information if required **Yes** **No**
- I agree to complete questionnaires asking me about psychological disorders and phenomena
  Yes **No**

I acknowledge that:

(a) My participation is voluntary and that I am free to withdraw from the project at any time without explanation;

(b) Any identifiable information about me which is gathered in the course of and as the result of my participating in this project will be (i) collected and retained for the purpose of this project and (ii) accessed and analysed by the researcher(s) for the purpose of conducting this project;

(c) My anonymity is preserved and I will not be identified in publications or otherwise without my express written consent.

By signing this document I agree to participate in this project.

Name of Participant: ……

Signature & Date: ……

Appendix JJ

Participant Information and Consent Form (Control group) (Study 4, Chapter 8)

PARTICIPANT CONSENT INFORMATION STATEMENT AND CONSENT FORM

Swinburne University of Technology

Project Title:
The Qualitative Development of a Measure of Cognitions and Beliefs in Trichotillomania – Clinical Validation

Principle Investigator:
Dr Maja Nedeljkovic (Senior Lecturer, Faculty of Health, Arts and Design, Swinburne University of Technology)
Student Investigators:
Miss Imogen Rehm (Student Investigator, Faculty of Health, Arts and Design, Swinburne University of Technology)
Miss Tanya Arabatzoudis (Student Investigator, Faculty of Health, Arts and Design, Swinburne University of Technology)

25. Introduction

You are invited to take part in this research project investigating Trichotillomania (chronic hairpulling). You have been invited because you believe you do not meet criteria for a current diagnosable psychological disorder.

This Consent Information Statement provides you with detailed information on the research project. It explains what participation in this research project will involve, in order to help you decide if you would like to take part. This Consent Information Statement is for you to keep.

26. Project and researcher interests

The results of this research project will be used by Student Investigator, Miss Imogen Rehm, in partial completion of her Doctor of Philosophy (Clinical Psychology) and by Miss Tanya Arabatzoudis, in partial completion of her Postgraduate Diploma of Psychology.

27. What is this project about and what is its purpose?

This research project will investigate a psychological condition called Trichotillomania. Individuals with Trichotillomania repeatedly and compulsively remove hair from their scalp, eyebrows, eyelashes and other bodily areas. This repeated hairpulling (which is often experienced as uncontrollable) typically results in noticeable hair loss, which is embarrassing, distressing, and accompanied by attempts to 'hide' the hair loss. Self-esteem, occupational and educational functioning, and social relationships can all be disrupted by Trichotillomania.

While it is generally understood that negative emotions play a large role in triggering hairpulling 'episodes' in individuals with Trichotillomania, the role of thoughts and beliefs in this process remains unknown. Building on their previous study that identified several types of thoughts and beliefs associated with Trichotillomania, the investigators in this new research project aim to develop and evaluate a psychological measure of these beliefs. In this study, the measure will be validated among individuals who meet current diagnostic criteria for Trichotillomania, and among individuals without a current diagnosable psychological disorder.

It is anticipated that development of this measure will increase our understanding of Trichotillomania, and will ultimately assist clinicians and researchers to develop more comprehensive and effective treatments.

28. What will participation involve?

Eligibility:

You are eligible to take part in this research project if you are:

- Age 18+ if recruited from Swinburne University's Research Experience Program
- Age 25+ if recruited from the wider community
- Do not have a current diagnosable psychological disorder
- Available and willing to complete approximately 90 minutes of assessment (see 'Procedures', below)

Procedures:

If you choose to participate in this study you will be asked to:

- Complete a 30-minute diagnostic interview with Student Investigator, Imogen Rehm and/or Student Investigator, Tanya Arabatzoudis. Interviews can be arranged to take place at Swinburne University, Hawthorn campus or via telephone. You will be asked about symptoms of common psychological disorders (e.g., depression, anxiety) in order to confirm your eligibility for this study.
- You will also be required to complete a battery of self-report psychological surveys, estimated to take 60 minutes to complete. These surveys will ask you about:
    - Thoughts/beliefs believed to be associated with Trichotillomania (i.e., the measure being validated in this study)
    - Depression and anxiety symptoms
    - Perfectionism, impulsivity, and self-esteem
- Should further information be required after completion of your diagnostic interview and surveys, you may be contacted regarding this. If you do not wish to be contacted after your participation, however, you may stipulate this on the 'Participant Consent Form' (below).

- Participants from the wider community will be compensated for their time with a $20 Coles-Myer gift voucher. Participants from Swinburne University's Research Experience Program will be compensated for their time with partial course credit, and therefore will not be eligible to receive a gift voucher.

29. What are the possible benefits of participating in this research?

There are no immediate benefits to you by participating in this study. However, your participation will contribute to the improved understanding of a psychological disorder (Trichotillomania) that causes significant distress and disruption to those it afflicts.

30. What are the possible risks of participating in this research?

It may be possible that the diagnostic interview results suggest that you are experiencing a current psychological disorder that you may not have previously been aware of. The researchers are suitably qualified in psychology, and can therefore provide you with helpful information about these results and how to find further assessment and treatment, should you request it.

31. Can I withdraw from participating in this research project?

Participation in this research project is voluntary, and you do not have to take part if you do not want to. If you decide to participate but later change your mind, you are free to withdraw from the project at any stage. Your choice to either participate or not participate will have no impact upon your future or current relationships with, or the quality of service provision provided by, Swinburne University.

32. What will happen to information about me?

Any information obtained about you in connection with the research project that can identify you will remain confidential, and accessible *only* to the investigators as named above. Any such information will be disclosed *only with your consent*, except as required by law. All identifying information on records (hardcopy and electronic) obtained during your participation will be removed and replaced with a random code. In any form of publication/presentation, only the pooled group data will be used. Any information and data collected as part of this research will be securely stored and destroyed after five years.

33. Research output

The results of this research will be presented as part of the Student Investigators' doctoral and postgraduate diploma dissertations. Results may also be published in peer-reviewed journals or presented at national/international conferences. Data obtained for this research study may also be utilised in future, related studies.

34. Further information about the project – who to contact

For further information about the project and to arrange an appointment to participate in the research, please do not hesitate to contact either:

Dr Maja Nedeljkovic, Senior Lecturer
Faculty of Life and Social Sciences, Swinburne University of Technology
mnedeljkovic@swin.edu.au, Tel: (03) 9214 4428

Miss Imogen Rehm, Student Investigator
Faculty of Life and Social Sciences, Swinburne University of Technology
irehm@swin.edu.au, Tel: (03) 9214 5553

35. Where can I go for extra support?

If you feel you would benefit from extra support after participating in this study, please do not hesitate to contact the Swinburne Psychology Clinic for low-cost counselling appointments: Swinburne University Hawthorn Campus, George Swinburne (GS) building, 34 Wakefield Street, Level 4. Tel: (03) 9214 8653.

If you are experiencing a crisis or need urgent help, urgently phone:

Lifeline 13 11 14

Suicide Helpline 1300 651 251

36. Concerns/complaints about the project – who to contact:

This project has been approved by or on behalf of Swinburne's Human Research Ethics Committee (SUHREC) in line with the *National Statement on Ethical Conduct in Human Research*. If you have any concerns or complaints about the conduct of this project, you can contact:

Research Ethics Officer, Swinburne Research (H68),
Swinburne University of Technology, P O Box 218, HAWTHORN VIC 3122.
Tel (03) 9214 5218 or +61 3 9214 5218 or resethics@swin.edu.au

PARTICIPANT CONSENT FORM

Swinburne University of Technology

Project Title: *The Qualitative Development of a Measure of Cognitions and Beliefs in Trichotillomania – Clinical Validation*

Principle Investigators:
Dr Maja Nedeljkovic (Senior Lecturer, Faculty of Health, Arts and Design, Swinburne University of Technology)
Miss Imogen Rehm (Student Investigator, Faculty of Health, Arts and Design, Swinburne University of Technology)
Miss Tanya Arabatzoudis (Student Investigator, Faculty of Health, Arts and Design, Swinburne University of Technology)

Please circle either A or B below to inform the investigators of your decision whether or not to participate:

E. I consent to participate in the project named above. I have been provided a copy of the project consent information statement to which this consent form relates and any questions I have asked have been answered to my satisfaction.

F. I do not consent to participate in the project named above. I do not wish to be contacted further regarding this research project.

In relation to this project, please circle your response to the following*:*

- I agree to be interviewed by the researcher **Yes** **No**
- I agree to make myself available for further information if required **Yes** **No**
- I agree to complete questionnaires asking me about psychological disorders and phenomena
  Yes **No**

I acknowledge that:

(a) My participation is voluntary and that I am free to withdraw from the project at any time without explanation;

(b) Any identifiable information about me which is gathered in the course of and as the result of my participating in this project will be (i) collected and retained for the purpose of this project and (ii) accessed and analysed by the researcher(s) for the purpose of conducting this project;

(c) My anonymity is preserved and I will not be identified in publications or otherwise without my express written consent.

By signing this document I agree to participate in this project.

Name of Participant: ……

Signature & Date: ……

Appendix KK

Ethics Approvals (Study 4, Chapter 8)

SUHREC Project 2013/262 Ethics Clearance for Modifications (2)

Keith Wilkins
Sent: Wednesday, 21 May 2014 12:12 PM
To: Maja Nedeljkovic
Cc: RES Ethics; Imogen Rehm

To: Dr Maja Nedeljkovic/Ms Imogen Rehm/Ms Tanya Arabatzoudis, FHAD

Dear Maja

SUHREC Project 2013/262 The Qualitative Development of a Measure of Cognition and Beliefs in Trichotillomania - Clinical Validation
Dr M Nedeljkovic, FHAD; Ms Imogen Rehm, Ms Tanya Arabatzoudis
Proposed Duration: 23/12/2013 To 31/03/2015 [Modified March 2014, May 2014]

I refer to your request to modify the approved protocol for the above project as emailed on 20 May 2014. The request, concerning further expanded recruitment and participation arrangements to include a community non-clinical sample, was put to a SUHREC delegate for consideration.

I am pleased to advise that, as modified to date, the project has approval to continue in line with ethics clearance conditions previously communicated and reprinted below.
Please contact the Research Ethics Office if you have any queries about on-going ethics clearance, citing the project number. Copies of clearance emails should be retained as part of project record-keeping.

As before, best wishes for the project.

Yours sincerely
Keith

Keith Wilkins
Secretary, SUHREC & Research Ethics Officer
Swinburne Research (H68)
Swinburne University of Technology
P O Box 218
HAWTHORN VIC 3122
Tel +61 3 9214 5218

From: Keith Wilkins
Sent: Thursday, 27 March 2014 5:09 PM
To: Maja Nedeljkovic; Imogen Rehm
Cc: RES Ethics
Subject: SUHREC Project 2013/262 Ethics Clearance for Modifications (1)

To: Dr Maja Nedeljkovic/Ms Imogen Rehm/Ms Tanya Arabatzoudis, FHAD
Dear Maja, Imogen and Tanya
SUHREC Project 2013/262 The Qualitative Development of a Measure of Cognition and Beliefs in Trichotillomania - Clinical Validation
Dr M Nedeljkovic, FHAD; Ms Imogen Rehm, Ms Tanya Arabatzoudis
Proposed Duration: 23/12/2013 To 31/03/2015 [Modified March 2014]

I refer to your request to modify the approved protocol for the above project as per your email of 26 March 2014 with attachments. The request, concerning expanded recruitment and participation, including an international sample, was put to a SUHREC delegate who found the request to be carefully prepared.

I am pleased to advise that, as modified to date, the project has approval to continue in line with ethics clearance conditions previously communicated and reprinted below.

Please contact the Research Ethics Office if you have any queries about on-going ethics clearance, citing the project number. Copies of clearance emails should be retained as part of project record-keeping.

As before, best wishes for the project.
Yours sincerely
Keith

Keith Wilkins
Secretary, SUHREC & Research Ethics Officer

From: Keith Wilkins
Sent: Monday, 23 December 2013 4:11 PM
To: Maja Nedeljkovic; Imogen Rehm
Cc: RES Ethics; FLSS Research
Subject: SUHREC Project 2013/262 Ethics Clearance

To: Dr Maja Nedeljkovic/Ms Imogen Rehm, FLSS
Dear Maja and Imogen
SUHREC Project 2013/262 The Qualitative Development of a Measure of Cognition and Beliefs in Trichotillomania - Clinical Validation
Dr M Nedeljkovic, FLSS; Ms Imogen Rehm
Proposed Duration: 23/12/2013 To 31/03/2015 [Adjusted]

I refer to the ethical review of the above project protocol by Swinburne's Human Research Ethics Committee (SUHREC). Your responses to the review, as per your email of 18 December 2013 with attachments, were put to a SUHREC delegate for consideration.

I am pleased to advise that, as submitted to date, the project may commence in line with standard on-going ethics clearance conditions here outlined.

- All human research activity undertaken under Swinburne auspices must conform to Swinburne and external regulatory standards, including the *National Statement on Ethical Conduct in Human Research* and with respect to secure data use, retention and disposal.

- The named Swinburne Chief Investigator/Supervisor remains responsible for any personnel appointed to or associated with the project being made aware of ethics clearance conditions, including research and consent procedures or instruments approved. Any change in chief investigator/supervisor requires timely notification and SUHREC endorsement.

- The above project has been approved as submitted for ethical review by or on behalf of SUHREC. Amendments to approved procedures or instruments ordinarily require prior ethical appraisal/ clearance. SUHREC must be notified immediately or as soon as possible thereafter of (a) any serious or unexpected adverse effects on participants and any redress measures; (b) proposed changes in protocols; and (c) unforeseen events which might affect continued ethical acceptability of the project.

- At a minimum, an annual report on the progress of the project is required as well as at the conclusion (or abandonment) of the project.

- A duly authorised external or internal audit of the project may be undertaken at any time.

Please contact the Research Ethics Office if you have any queries about on-going ethics clearance, citing the SUHREC project number. Copies of clearance emails should be retained as part of project record-keeping.

Best wishes for the project.
Yours sincerely
Keith

Keith Wilkins
Secretary, SUHREC & Research Ethics Officer

Appendix LL

Relationships between BiTS Scales and Symptom Measures Separated by Group (Study 4, Chapter 8)

As explained in Chapter 8 (section 8.3.5), the small sample size of participants with TTM symptoms limited the statistical power with which to examine relationships between BiTS subscales, TTM symptoms and mood symptoms in that sample alone. As such, the pooled sample of TTM participants and control participants ($N = 68$) was utilised (cf. Table 8.9). Correlations separated by group are shown in Tables KK1 and KK2, below.

As shown in Table LL1, there were moderate strength correlations between hairpulling severity (MGHHPS) and scores on the BiTS-NSB and BiTS-BC subscales ($r = .36 – .46$). Despite their moderate strength, these correlations were not statistically significant – presumably due to low statistical power. Interestingly, there was almost no relationship between hairpulling severity and the BiTS-EA subscale among TTM participants ($r = .01$), but there was a small, albeit non-significant relationship among these variables in the control group (refer to Table LL2; $r_s = .20$). Supporting conclusions made in Chapter 9 (specifically section 9.2.1), this indicates a need for additional research to examine the specificity of the BiTS-EA construct to TTM symptoms in clinical samples, with a view to determining its utility for inclusion within the scale.

Table LL1

Zero-order Pearson's Correlations between the BiTS, MGHHPS, MIST-A, DASS-21 Scores for TTM Participants (n = 20)

Measure	MGHHPS	MIST-A Automatic	MIST-A Focused	DASS-D	DASS-A
BiTS-NSB	.36	-.12	.58**	.53*	.49*
BiTS-PC	.40	-.05	.39	.38	.43
BiTS-EA	.01	-.10	.37	.56**	.28
BiTS total	.31	-.15	.62**	.67**	.51*
MGHHPS	1	.26	.23	.09	.01
MIST-A Automatic		1	-.08	-.12	-.29
MIST-A Focused			1	.53*	.52*
DASS-D				1	.28
DASS-A					1
M	15.10	26.35	50.65	11.50	11.80
SD	5.94	7.86	14.22	8.23	11.57

Note. BiTS = Beliefs in Trichotillomania Scale; NSB = Negative Self-Beliefs; PC = Perfectionism/Control; EA = Emotional Avoidance; RSE = Rosenberg Self-Esteem scale; MGHHPS = Massachusetts General Hospital Hair Pulling Scale; MIST-A = Milwaukee Inventory for Subtypes of Trichotillomania-Adult version; DASS-A = Depression Anxiety Stress Scales-Anxiety; DASS-D = Depression.

*$p < .05$, **$p < .01$.

Table LL2

Zero-order Spearman's Correlations between the BiTS, MGHHPS, and DASS-21 Scores for Control Participants (n = 48)

Measure	MGHHPS	DASS-D	DASS-A
BiTS-NSB	.25	.46**	.42**
BiTS-PC	.27	.38**	.42**
BiTS-EA	.20	.38**	.36*
BiTS total	.28	.55**	.50**
MGHHPS	1	.37**	.33*
DASS-D		1	.49**
DASS-A			1
M	0.35	4.00	3.17
SD	1.28	6.51	5.73

Note. BiTS = Beliefs in Trichotillomania Scale; NSB = Negative Self-Beliefs; PC = Perfectionism/Control; EA = Emotional Avoidance; RSE = Rosenberg Self-Esteem scale; MGHHPS = Massachusetts General Hospital Hair Pulling Scale; DASS-A = Depression Anxiety Stress Scales-Anxiety; DASS-D = Depression.

*$p < .05$, **$p < .01$.